Robust Control Design for the VEGA Launch Vehicle during atmospheric flight

Diego Navarro-Tapia
Andrés Marcos

www.tasc-group.com
Technology for AeroSpace Control (TASC)
Aerospace Engineering Department
University of Bristol, U.K.

Samir Bennani

ESA-ESTEC
GNC launcher expert
Noordwijk,
The Netherlands

International Workshop on Robust Modeling, Design & Analysis – Robust-MDA 2017 – Bristol, UK

Motivation

- Study robust control laws to improve VEGA missions
  - (i) Improve safety and performance capabilities
  - (ii) Improve GNC robustness
  - (iii) Reduce the need for intensive mission-dependent control tuning before each flight
- Explore adaptive features of the VEGA GNC functions
- Transfer the techniques to industry
  - (i) Reconcile classical control with robust control techniques

Funded by an **NPI ESA-ESTEC** contract 4000114460/15/NL/MH/ats

"***Robust & Adaptable Launcher TVC Control Systems for the VEGA Evolution***"

Samir Bennani

Andrés Marcos

Christophe Roux

Diego Navarro-Tapia is also the recipient of a DTP award by the UK EPSRC

Outline

1. VEGA mission & vehicle
2. Structured H-infinity synthesis
3. LPV (Linear Parameter Varying) synthesis
4. Conclusions

Outline

1. VEGA mission & vehicle
2. Structured H-infinity synthesis
3. LPV (Linear Parameter Varying) synthesis
4. Conclusions

VEGA mission and vehicle:
VEGA mission

VEGA (Vettore Europeo di Generazione Avanzata)

is the **new European Small Launch Vehicle**

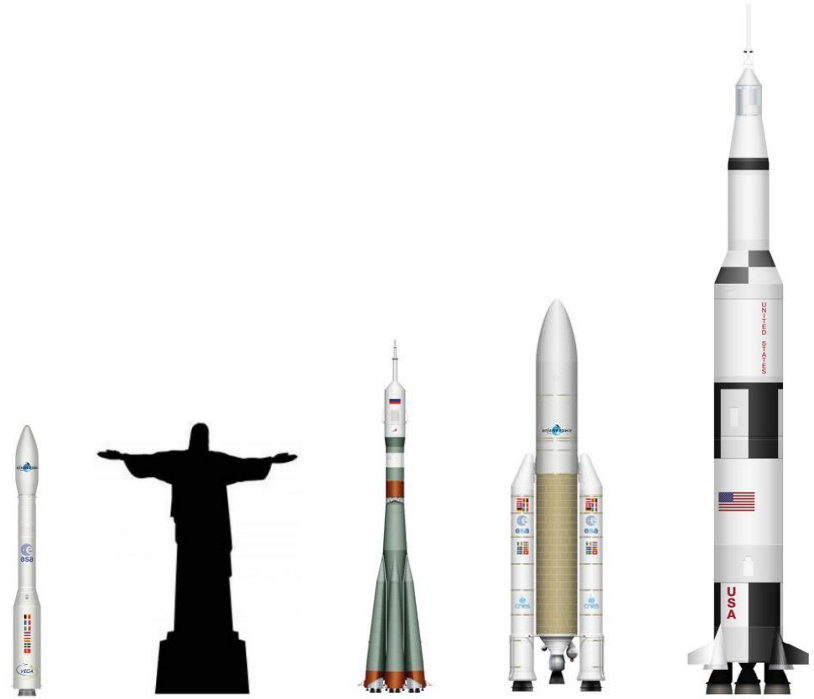

VEGA | Cristo Redentor (Rio de Janeiro) | Soyuz | Arianne 5 | Saturn V

10 successful flights

1st flight on 13th February 2012 (Multi payload)

2nd flight on 7th May 2013 (Multi payload)

3rd flight on 30th April 2014 (KazEOSAT-1)

4th flight on 11th February 2015 (IXV)

5th flight on 23rd June 2015 (Sentinel-2A)

6th flight on 3rd December 2015 (LISA Pathfinder)

7th flight on 16th September 2016 (Multi payload)

8th flight on 5th December 2016 (Göktürk-1A)

9th flight on 7th March 2017 (Sentinel 2B)

10th flight on 1st August 2017 (Multi payload)

and more to come:

11th flight on 11th November 2017 (MN35-13)

VEGA mission and vehicle:
Challenges – Vehicle, Environment and Dynamics

Four stages vehicle, all controlled by **thrust vectoring system (TVC)**

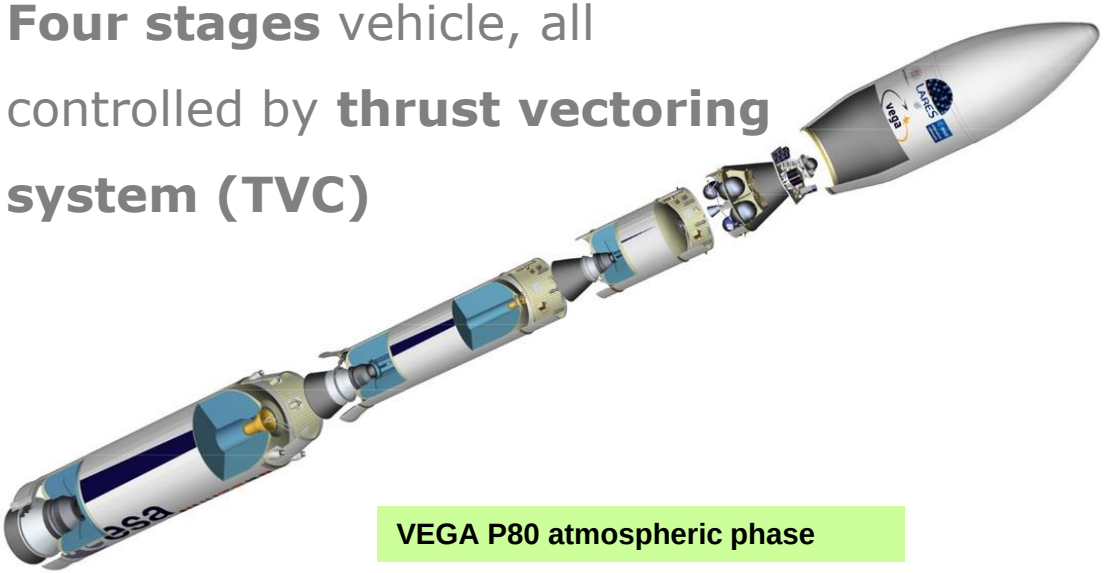

Atmospheric phase challenges

- **Launch vehicle:**
  - Unstable
  - Flexible structure
- **High variation of flight parameters**
- **Challenging environment**:
  - Wind disturbances
  - Structural loads (Qalpha)

VEGA P80 atmospheric phase

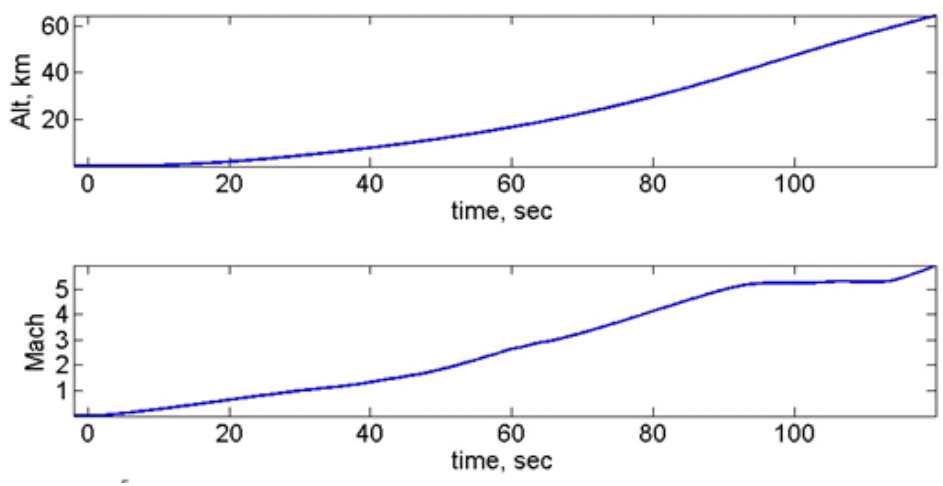

VEGA Qalpha wind effects

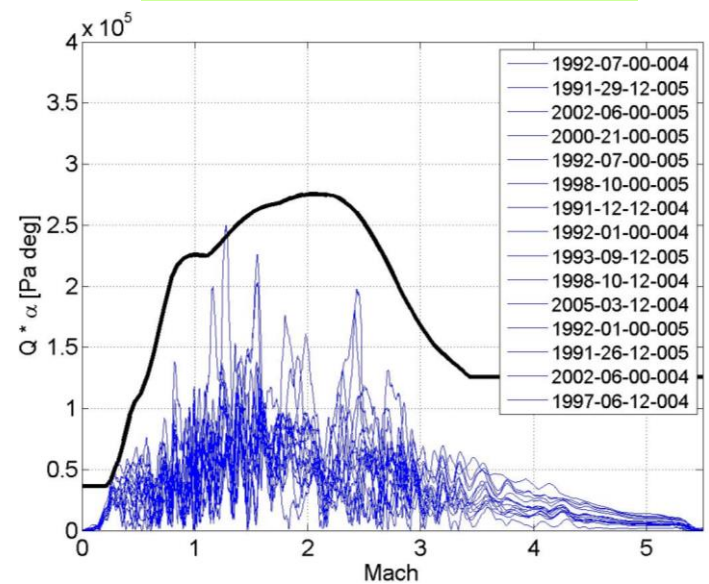

VEGA mission and vehicle:
Challenges – Uncertainties

120 uncertain and dispersion parameters: MCI, bending modes characteristics …

Type	Flag	Description
AEROELASTICITY	Flag.aeroelastic	aero-elasticity effect (+10% on CN coefficient)
AERODYNAMICS	Flag.disp_CA	Dispersion on 1st Stage Axial Coefficient
	Flag.unc_CA	Uncertainty on 1st Stage Axial Coefficient
	Flag.disp_CN	Dispersion on 1st Stage Normal Coefficient
	Flag.unc_CN	Uncertainty on 1st Stage Normal Coefficient
	Flag.disp_Xcp	Dispersion on 1st Stage Xcp
	Flag.unc_Xcp	Uncertainty on 1st Stage Xcp
	Flag.aero_roll	To enable Roll motion
WIND	Flag.azimuth_wind_angle	Wind azimuth direction [rad]
	Flag.h_wind	Synthetic wind gust altitude [Km]
IRS	Flag.IRSmountingX	IRS Mounting Error wrt X Body Axis
	Flag.IRSmountingY	IRS Mounting Error wrt Y Body Axis
	Flag.IRSmountingZ	IRS Mounting Error wrt Z Body Axis
THRUST PARAMETERS SCATTERING	Flag.dISP	1st stage impulse scattering
	Flag.dTc	Scattering on time burn
	Flag.SRM_roll	Scattering on P80 Roll Torque
MCI	Flag.stagedM	Structural mass scattering
	Flag.stagedM_Prop	Scattering on propellant mass
	Flag.stagedJx	Scattering on Stage XX MOI
	Flag.stagedJy	Scattering on Stage YY MOI
	Flag.stagedJz	Scattering on Stage ZZ MOI
	Flag. stagedxCOG	Scattering on X CoG
	Flag. stagedyCOG	Scattering on Y CoG
	Flag. stagedzCOG	Scattering on Z CoG
	Flag. stagedJx_S	Scattering on structural Stage XX MOI
	Flag. stagedJy_S	Scattering on structural Stage YY MOI
	Flag. stagedJz_S	Scattering on structural Stage ZZ MOI
	Flag. stagedxCOG_S	Scattering on structural X CoG
	Flag. stagedyCOG_S	Scattering on Y structural CoG

MCI	Flag.PLdM	Scattering on PL Mass
	Flag.PLdJx	Scattering on PL XX MOI
	Flag.PldJy	Scattering on PL YY MOI
	Flag.PLdJz	Scattering on PL ZZ MOI
	Flag.PLdxCOG	Scattering on PL X CoG
	Flag.PLdyCOG	Scattering on PL Y CoG
	Flag.PLdzCOG	Scattering on PL Z CoG
THRUST OFFSET & MISALIGNMENT	Flag.TVC_SF_A	Scattering on TVC gain Lane A
	Flag.TVC_bias_A_disp	Scattering on TVC Lane A (Gaussian)
	Flag.TVC_bias_A_unc	Scattering on TVC Lane A (uniform)
	Flag.TVC_SF_B	Scattering on TVC gain Lane B
	Flag.TVC_bias_B_disp	Scattering on TVC Lane B (Gaussian)
	Flag.TVC_bias_B_unc	Scattering on TVC Lane B (uniform)
	Flag.Thrust_misA_disp	Scattering on thrust misalignment first lane (Gaussian)
	Flag.Thrust_misB_disp	Scattering on thrust misalignment second lane (Gaussian)
	Flag.Thrust_misA_unc	Scattering on thrust misalignment first lane (uniform)
	Flag.Thrust_misB_unc	Scattering on thrust misalignment second lane (uniform)
	Flag.PvP_offsetX	Scattering on thrust offset in X
	Flag.PvP_offsetY_disp	Scattering on thrust offset in Y (Gaussian)
	Flag.PvP_offsetZ_disp	Scattering on thrust offset in Z (Gaussian)
	Flag.PvP_offsetY_unc	Scattering on thrust offset in Y (uniform)
	Flag.PvP_offsetZ_unc	Scattering on thrust offset in Z (uniform)
ATMOSPHERE	Flag.air_density_scat	Atmospheric Density
SEPARATION DISTURB	Flag.sep_dist_yz	

VEGA mission and vehicle:
High-fidelity, nonlinear, time-domain simulator

- The model used is a **6 degrees-of-freedom nonlinear simulator of the VEGA launcher** set up to perform simulations in the atmospheric flight phase P80, **VEGACONTROL**
- It is developed in Simulink with S-Function written in C-code and includes:

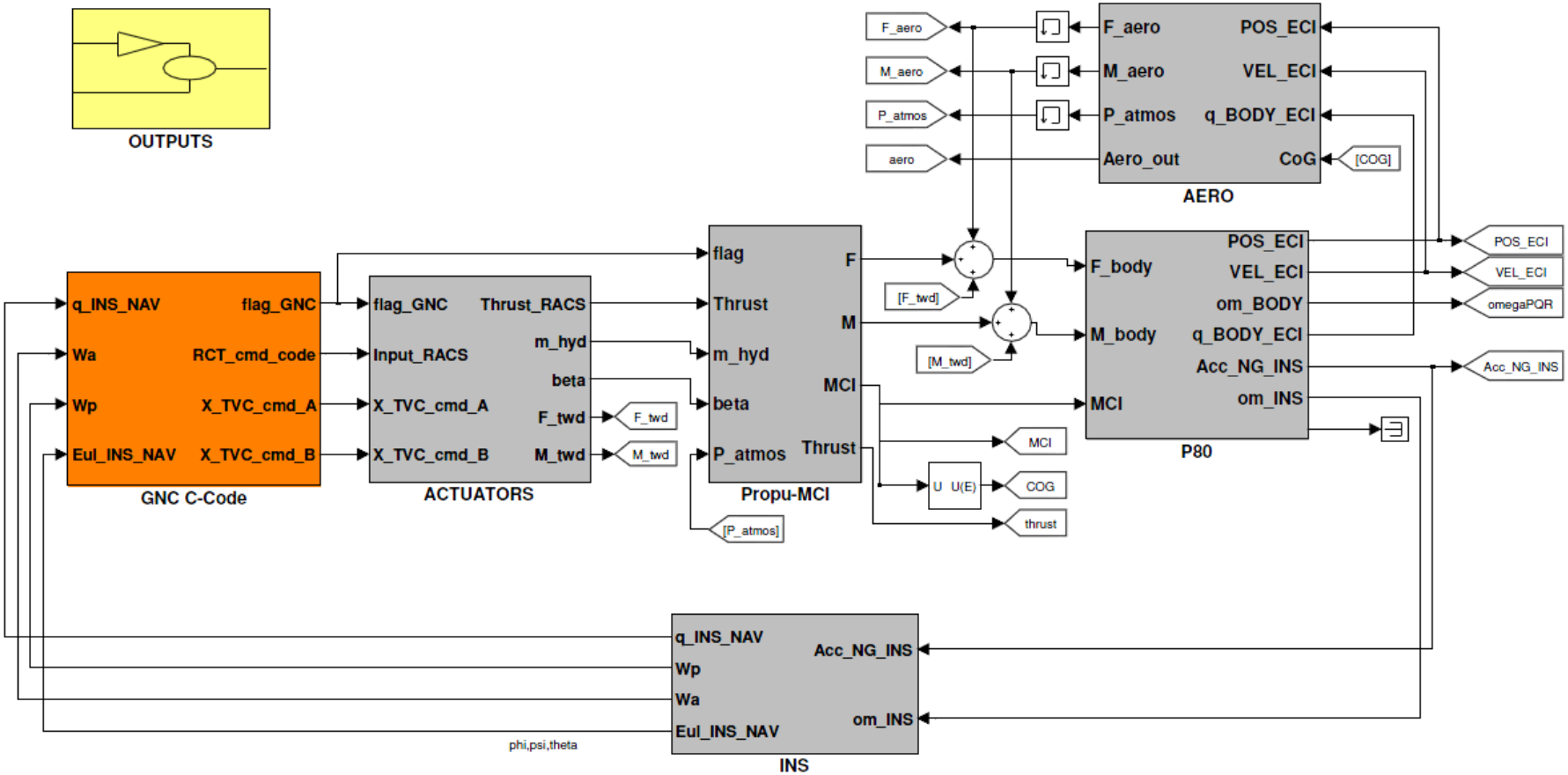

VEGA mission and vehicle:
Industrial state-of-the-practice for control design

1. Launcher **model linearized** at representative points

time = [10, 20, 30, 40, 50, 60, 70, 80, 90, 100, 110] seconds

2. For each point, **independent design first & then joint tuning** of:

- Rigid-body control design
- Flexible bending filter design
- Rigid- and flexible-body joint tuning

3. **Ad-hoc gain scheduling** based on some parameter (time, VNG)

4. **Intensive V&V process** using high fidelity nonlinear simulation

VEGA mission and vehicle:
Industrial state-of-the-practice for control design

Control design task

- ❑ **Achieve stability**

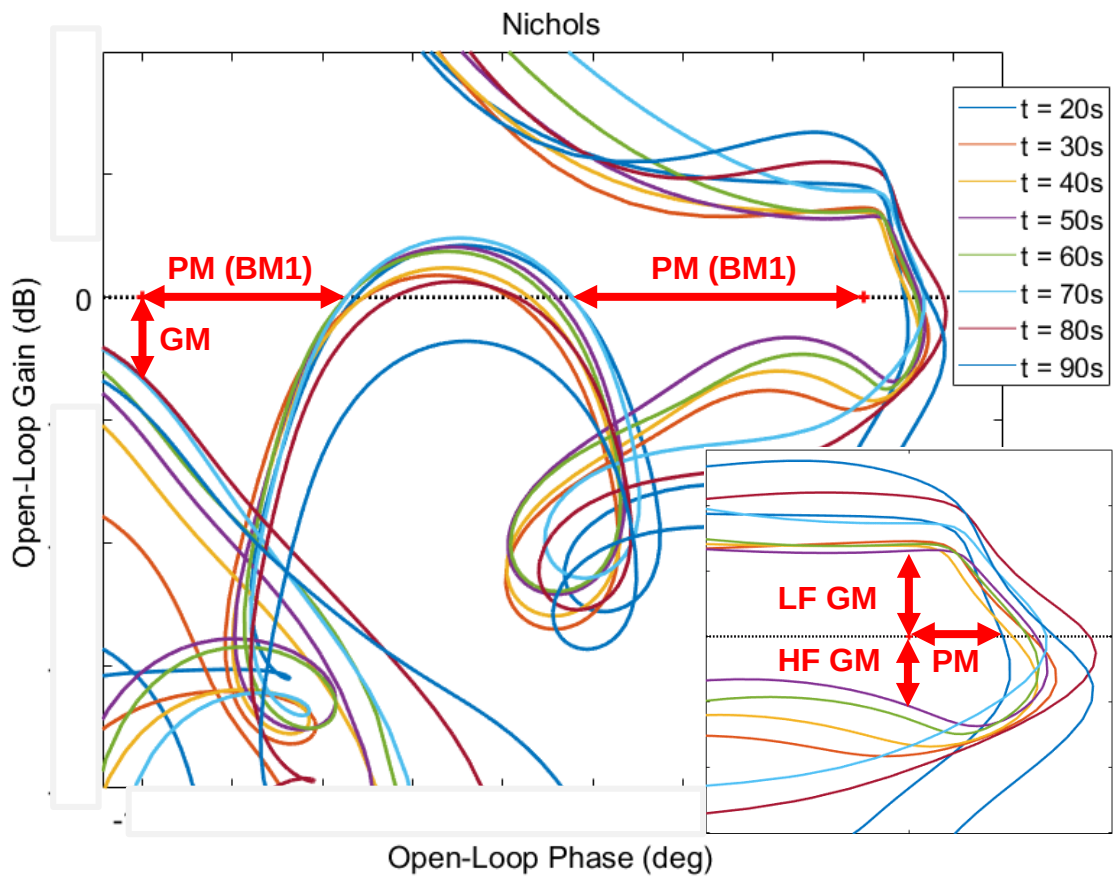

VEGA mission and vehicle:
Industrial state-of-the-practice for control design

Control design task

- ❑ **Achieve stability**

- ❑ **Optimize performance**

Pure Attitude Control	Pure Load Relief Control	Optimized Control

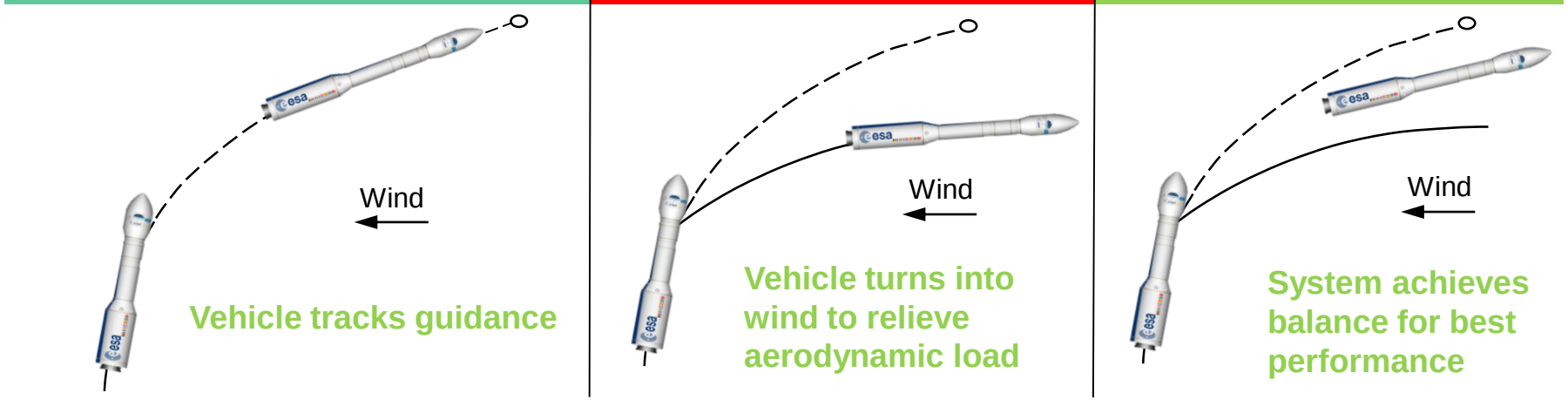

VEGA mission and vehicle:
Industrial state-of-the-practice for control design

Control design task

- **Achieve stability**

- **Optimize performance**

- **Provide robustness**

Stability and performance must be ensured in presence of:

- Uncertainties

- Disturbances

Outline

1. VEGA mission & vehicle
2. Structured H-infinity synthesis
3. LPV (Linear Parameter Varying) synthesis
4. Conclusions

Structured H-infinity synthesis:
Closed-loop for design: TVC controller structure

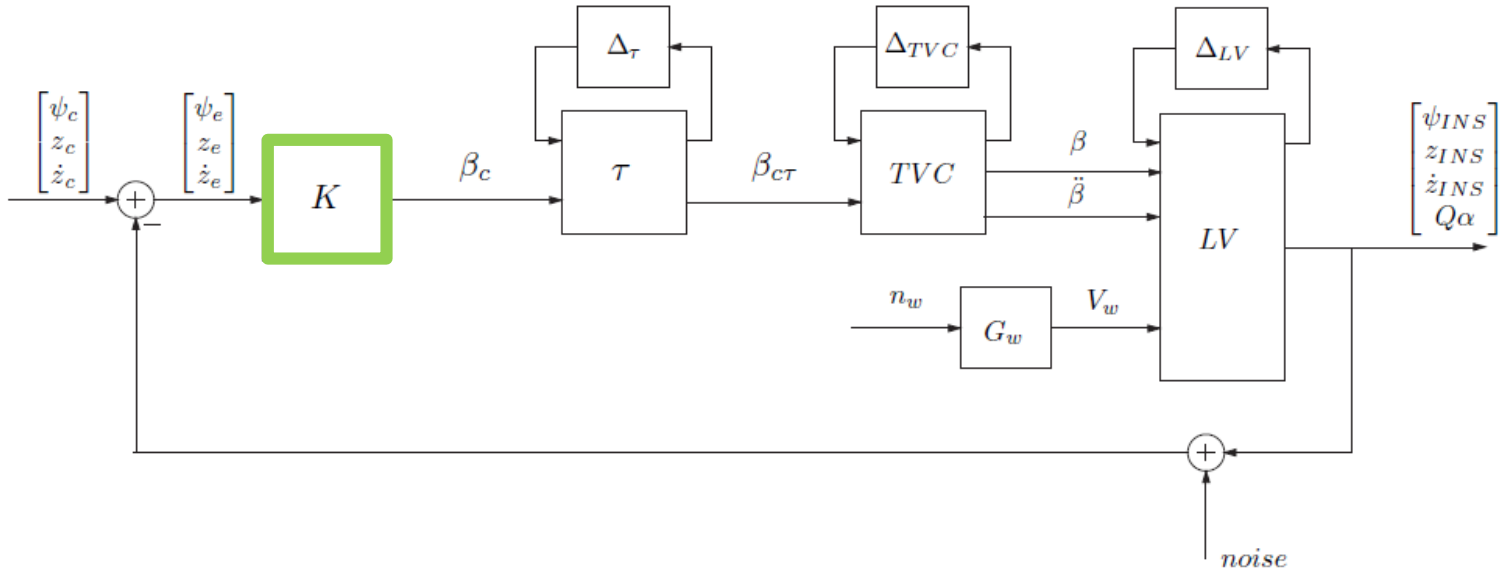

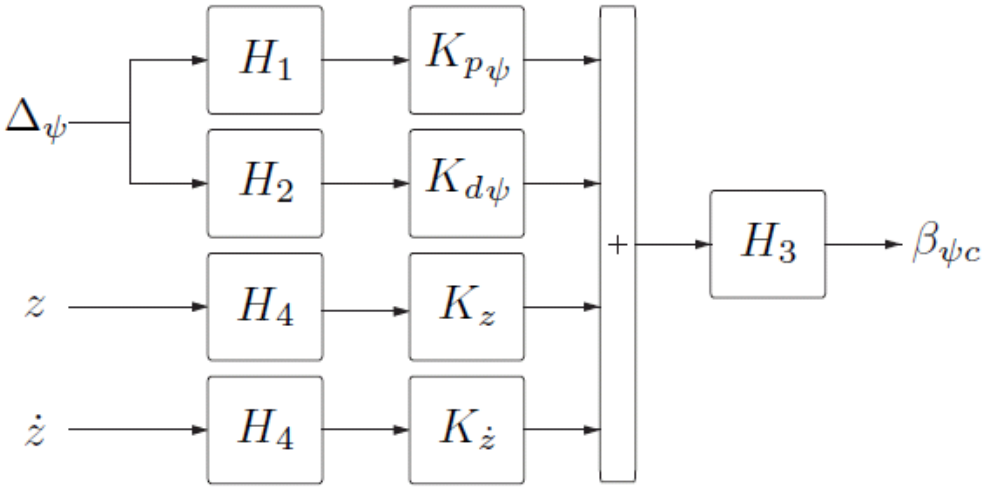

VEGA controller structure

- **PD in attitude**
- **Lateral control**

  (drift and drift-rate)
- **H filters**

Structured H-infinity synthesis:
Closed-loop for design: delay and TVC actuator

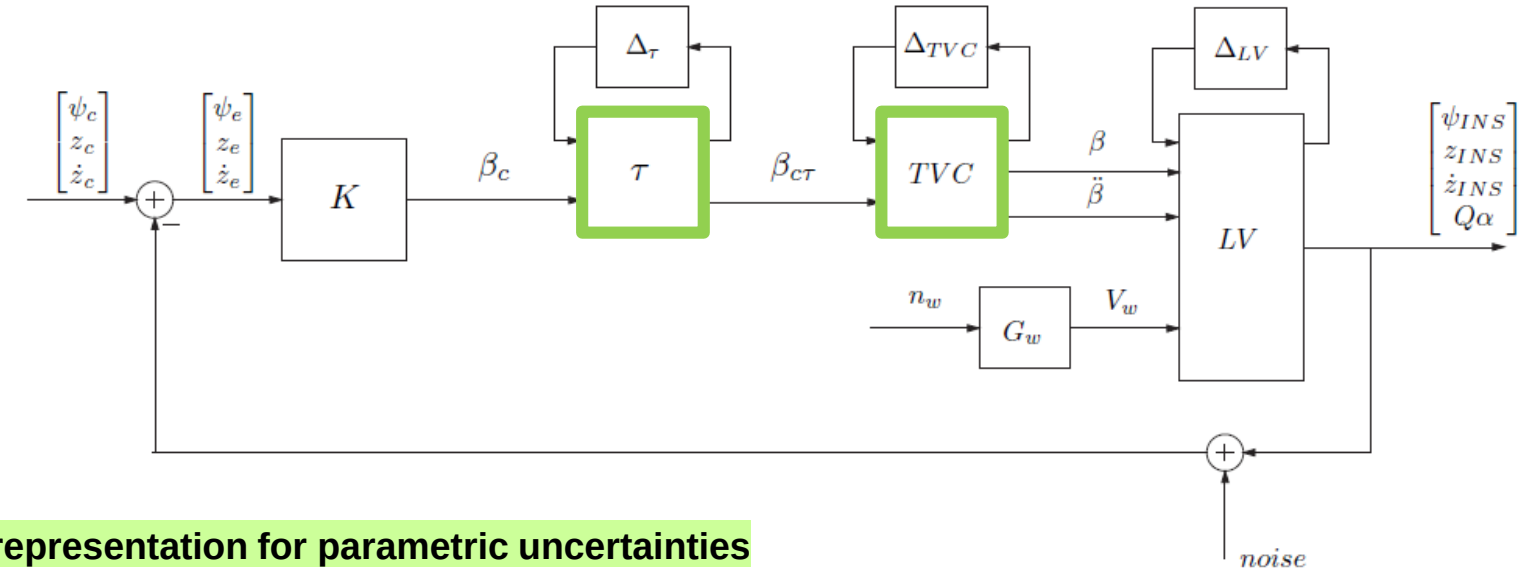

LFT representation for parametric uncertainties

Delay block

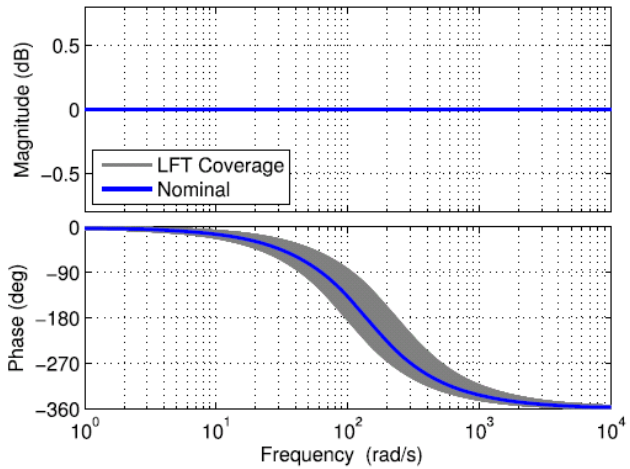

TVC actuator

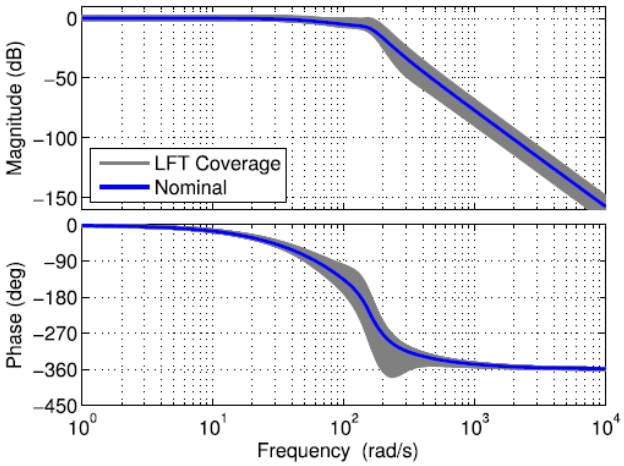

Structured H-infinity synthesis:
Closed-loop for design: launch vehicle model

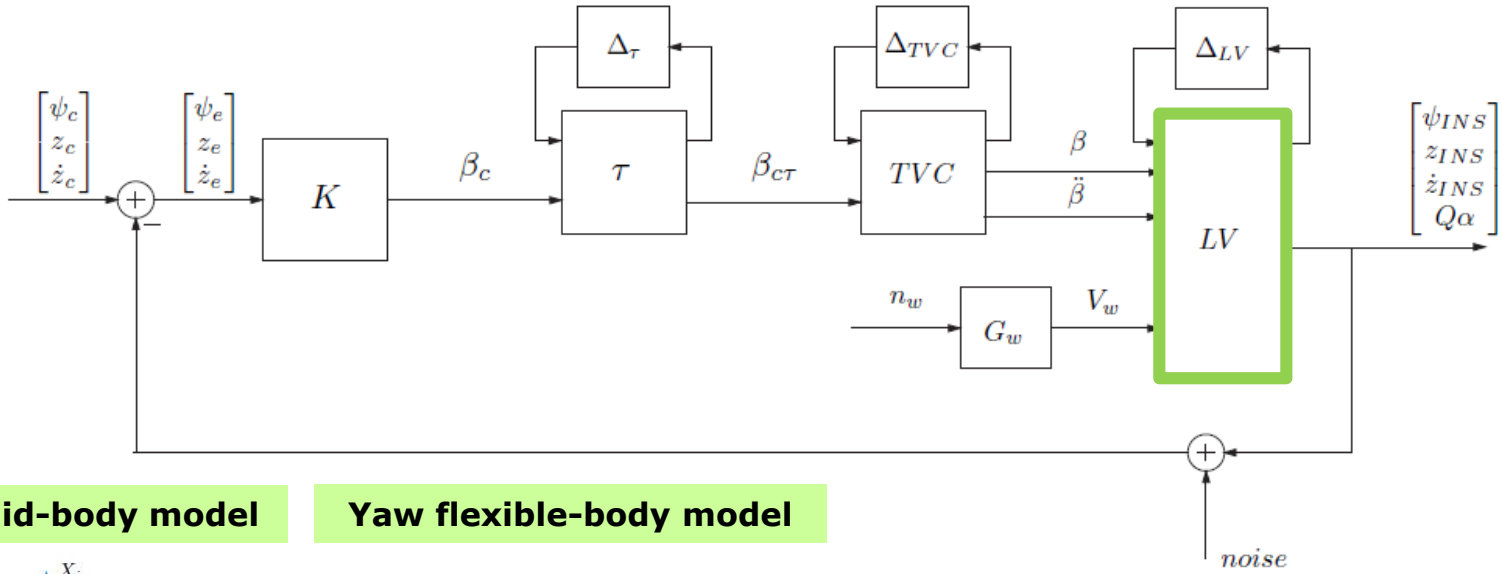

Yaw rigid-body model

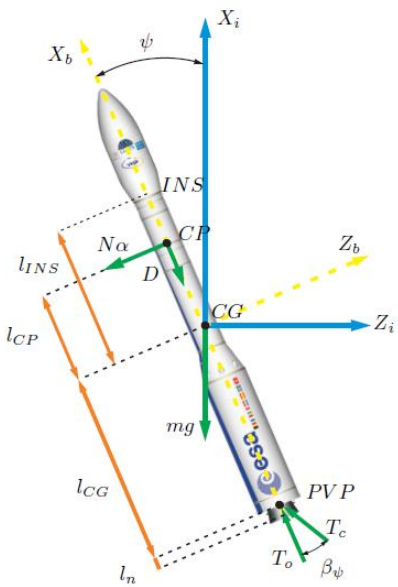

Yaw flexible-body model

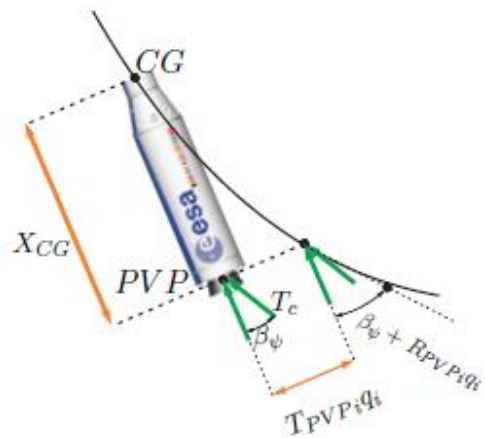

The launcher dynamics described by:

Rotational motion (yaw ψ or pitch θ)

Translational motion (y or z)

Yaw and pitch planes are identical if the roll rate is considered negligible.

Structured H-infinity synthesis:
Augmented closed-loop for design

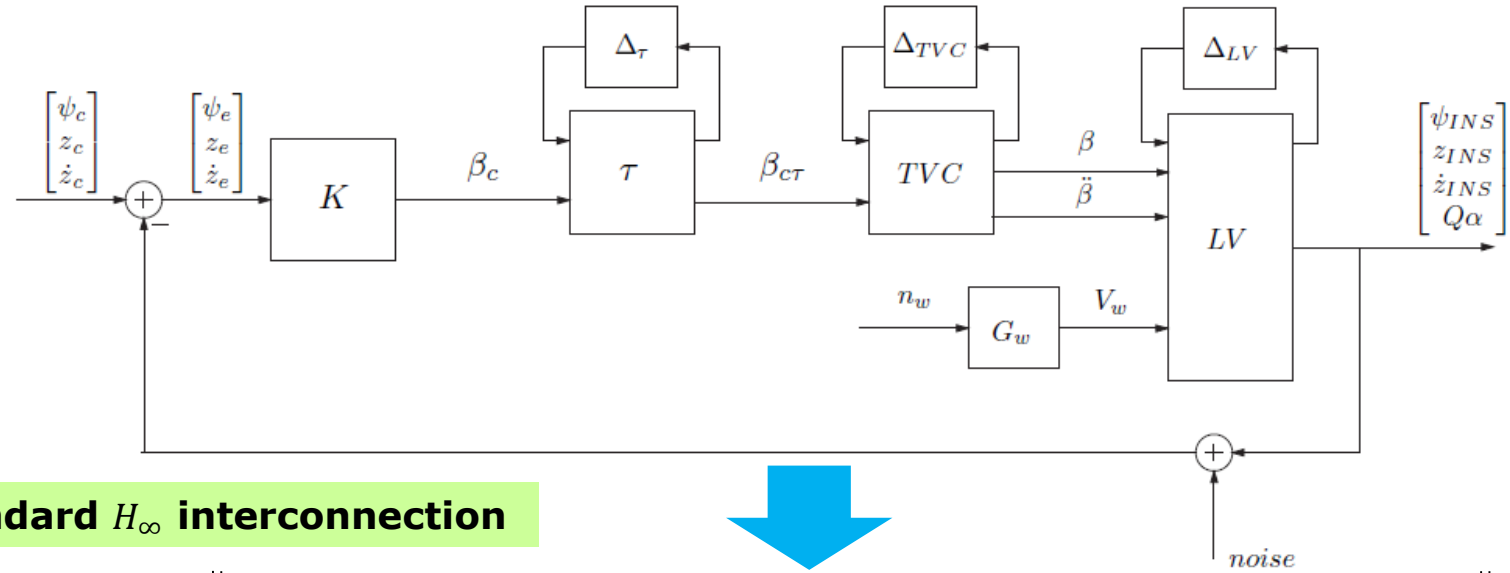

Standard H_∞ interconnection

Structured H-infinity Control problem

$$\min_K \|F_l(M,K)\|_\infty$$

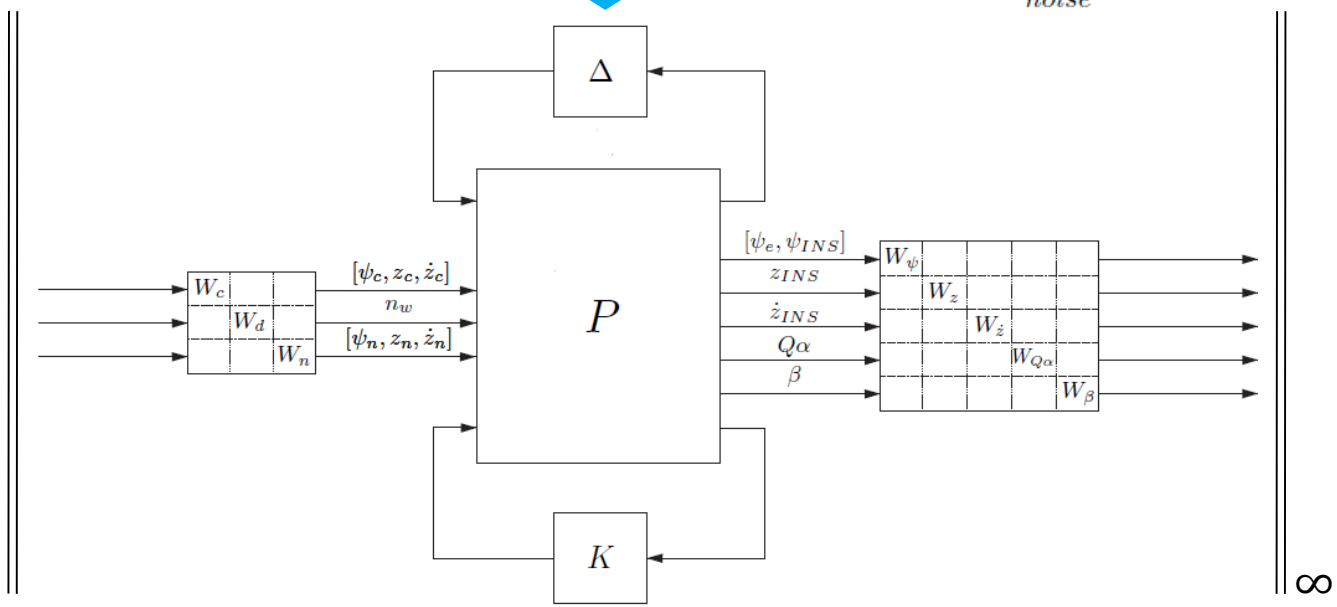

Requirements expressed as input/output weighting functions

Structured H-infinity synthesis:
Legacy recovery: linear design @ t=50s

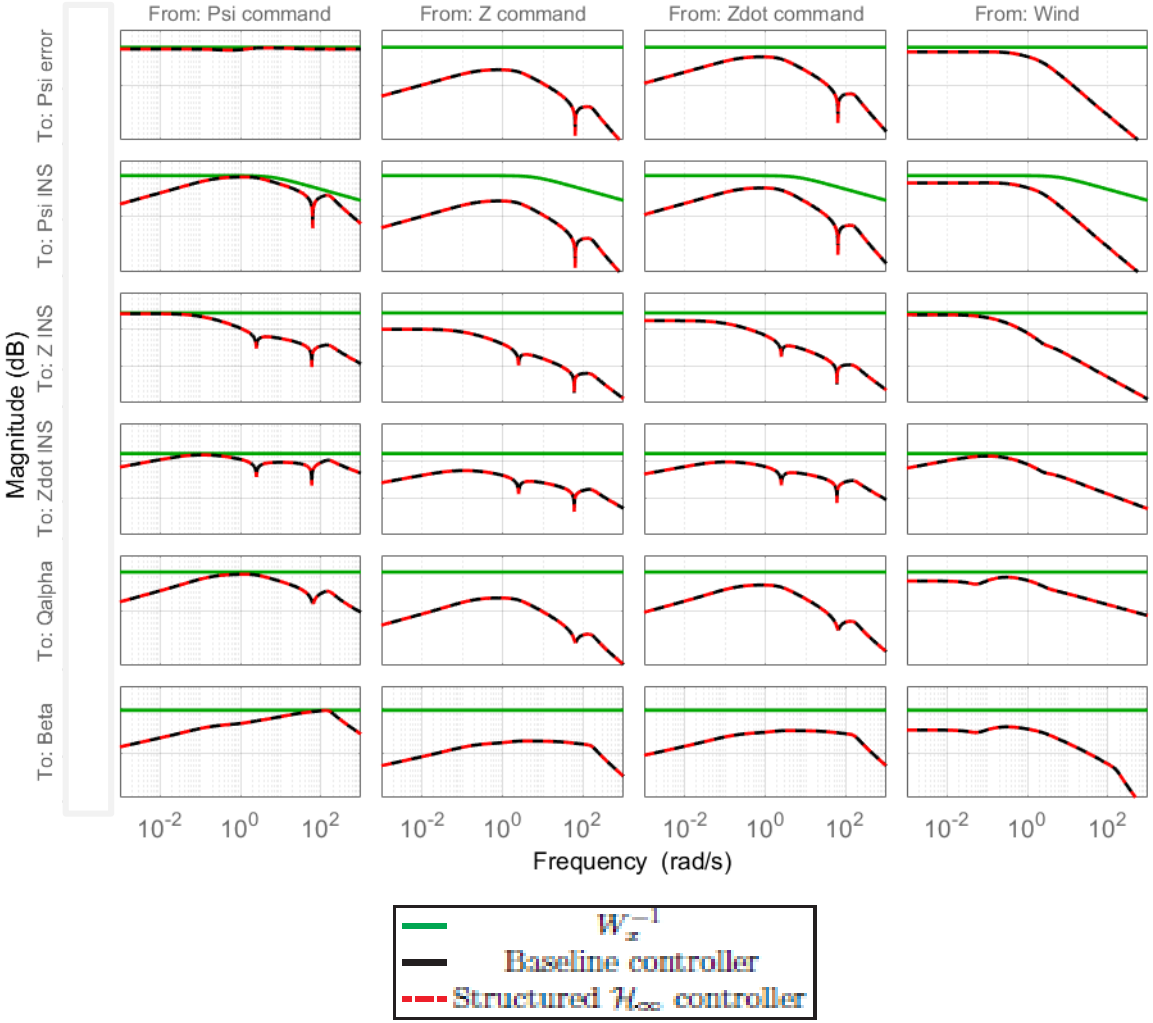

VEGACONTROL verification

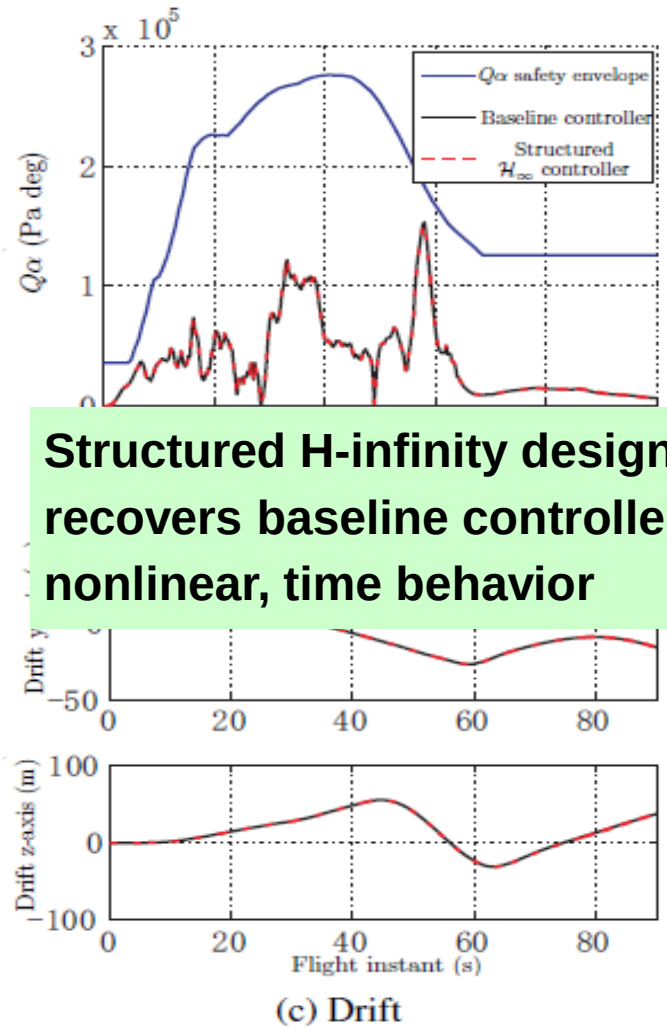

(c) Drift

Structured H-infinity design recovers baseline controller nonlinear, time behavior

The baseline controller frequency response is successfully recovered at t=50s

Structured H-infinity synthesis:
Closed-loop for design: wind generator (i)

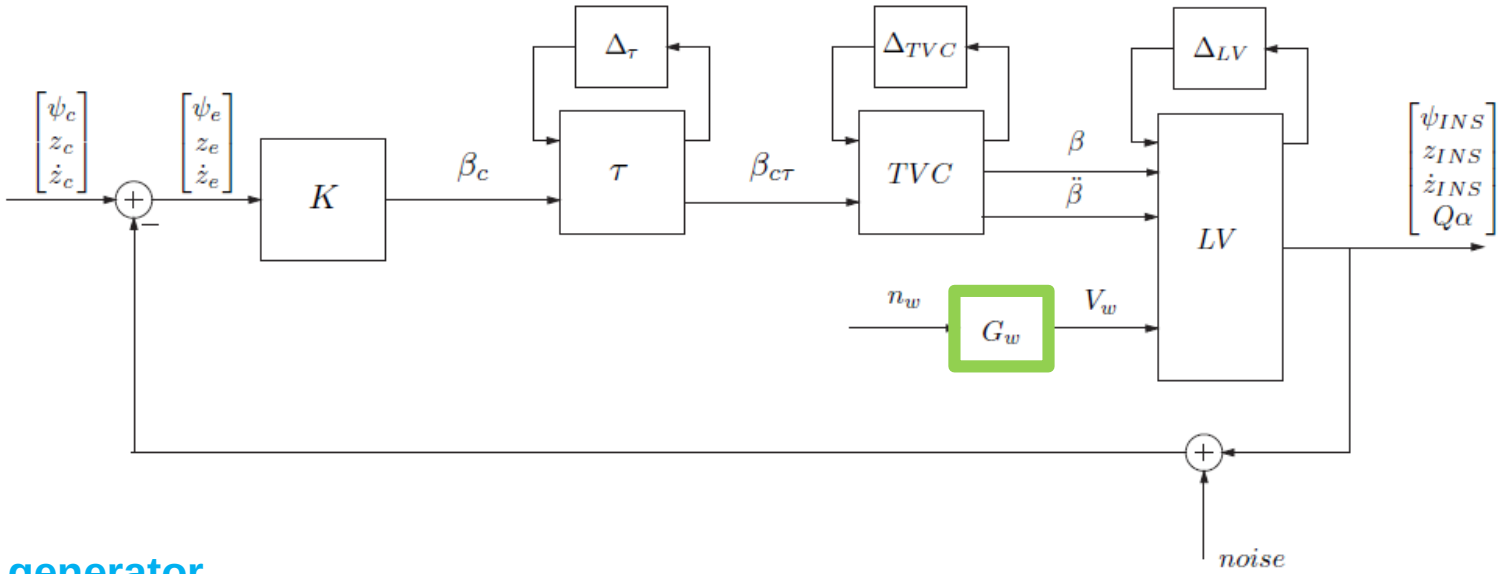

Wind generator

Modelled by a **Dryden filter** for [light, moderate, severe] turbulence

$$G_{wind}(s,h) = \frac{v_w}{n_w} = \frac{\sqrt{\frac{2}{\pi}\frac{V(h)-v_{wp}(h)}{L(h)}\sigma^2(h)}}{s+\frac{V(h)-v_{wp}(h)}{L(h)}}$$

Structured H-infinity synthesis:
Closed-loop for design: wind generator (ii)

Wind VV05: `'07_2015_23_12_005.wind'`

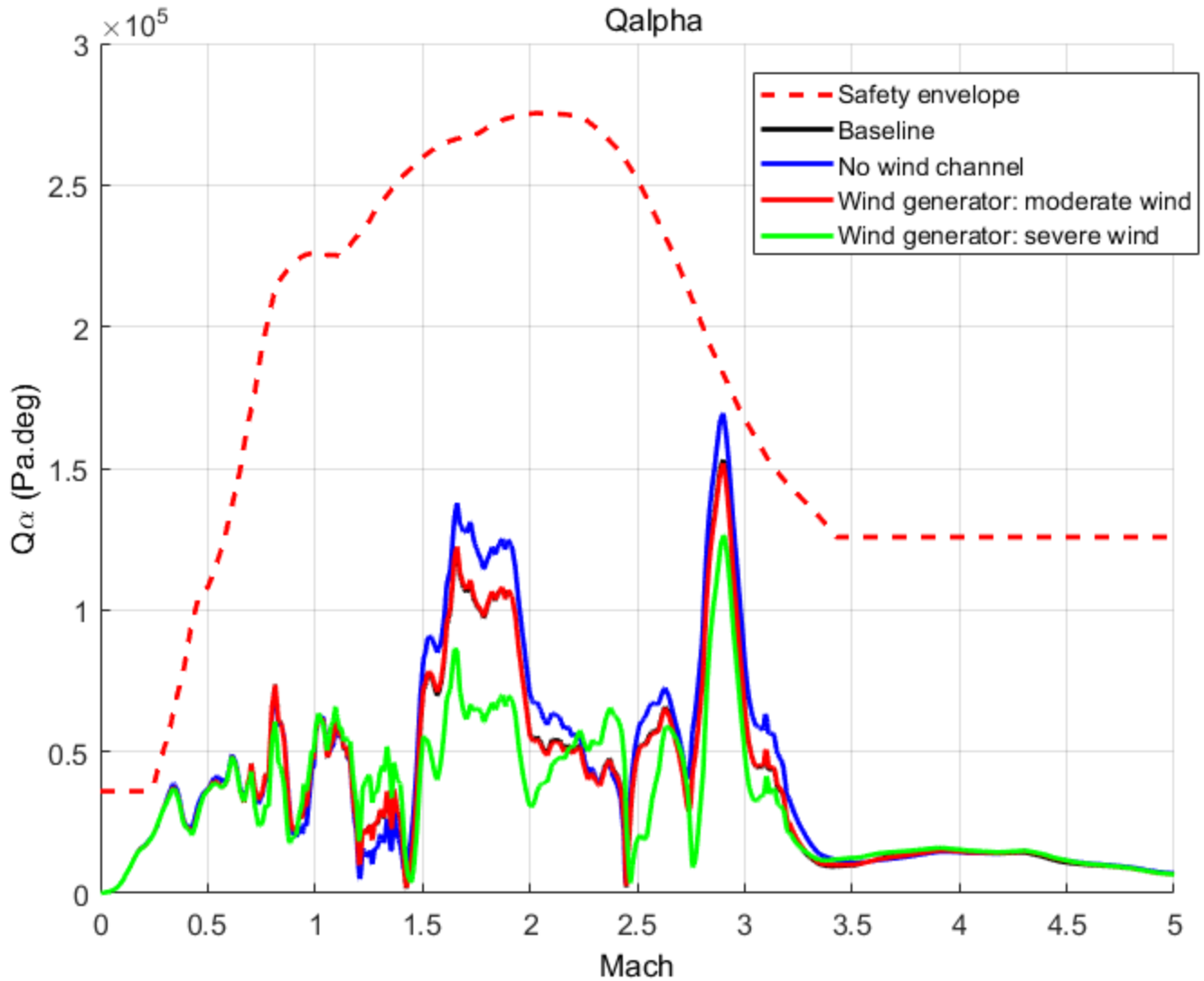

Controller [K1]

No wind channel in the design

Controller [K2]

Wind generator: moderate wind

Controller [K3]

Wind generator: severe wind

Structured H-infinity synthesis:
Robust rigid-body design

Robust rigid-body design

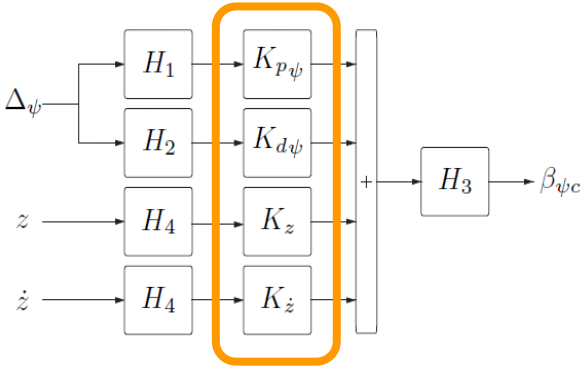

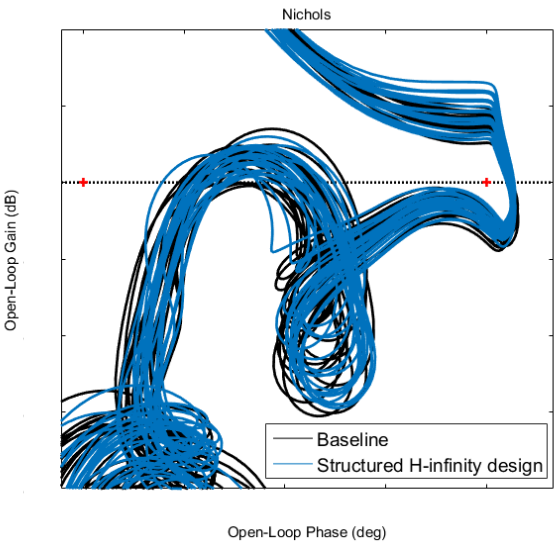

Robust rigid- and flexible-body design

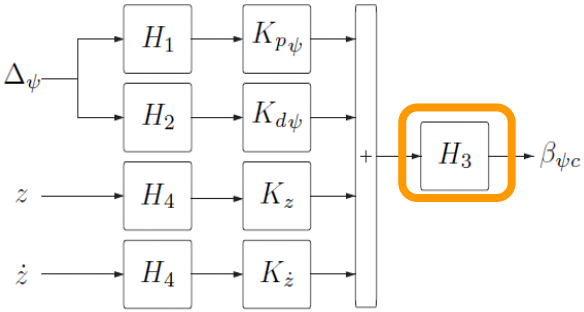

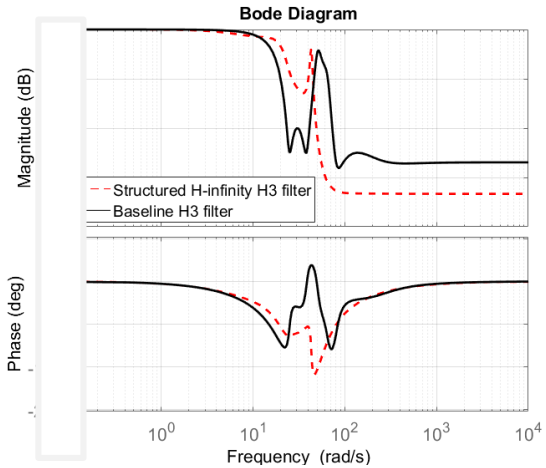

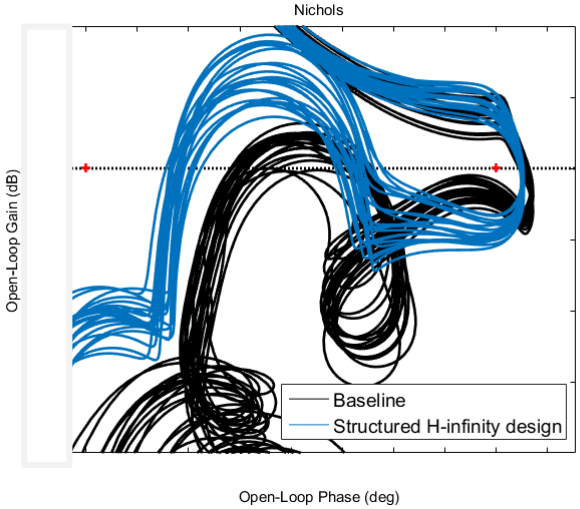

Structured H-infinity synthesis:
Robust rigid-body design: robust stability

Robust rigid-body design

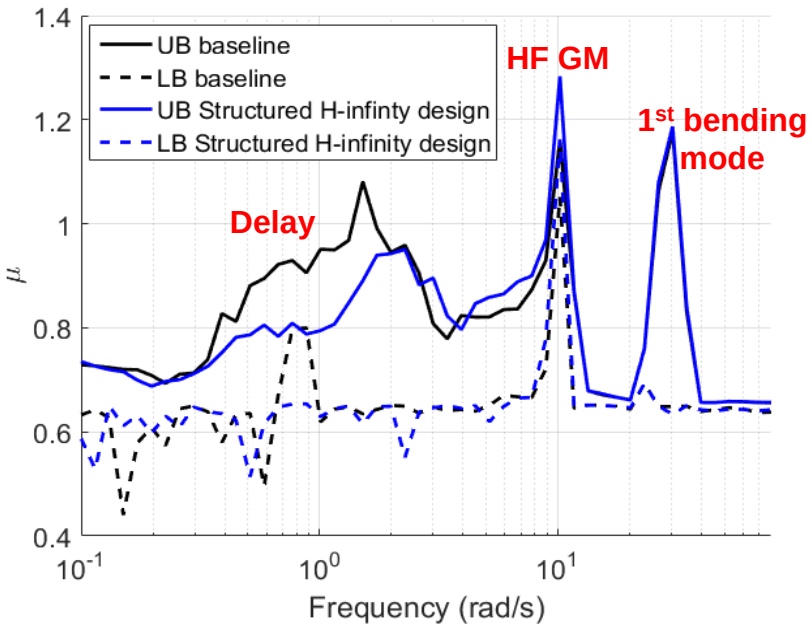

Robust rigid- and flexible-body design

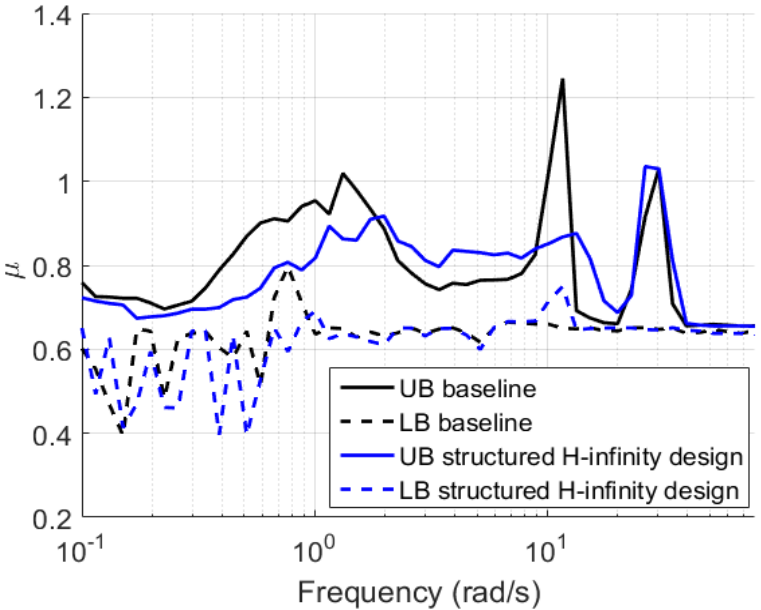

Outline

1. VEGA mission & vehicle
2. Structured H-infinity synthesis
3. LPV (Linear Parameter Varying) synthesis
4. Conclusions

LPV design technique:
Introduction

Family LTI/LFT models

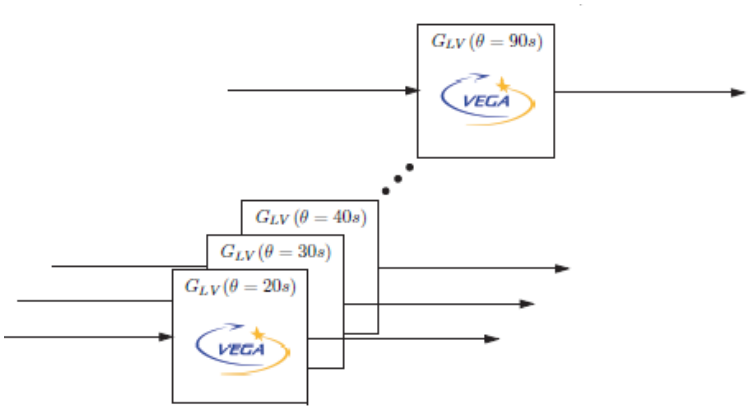

LPV model

LPV synthesis

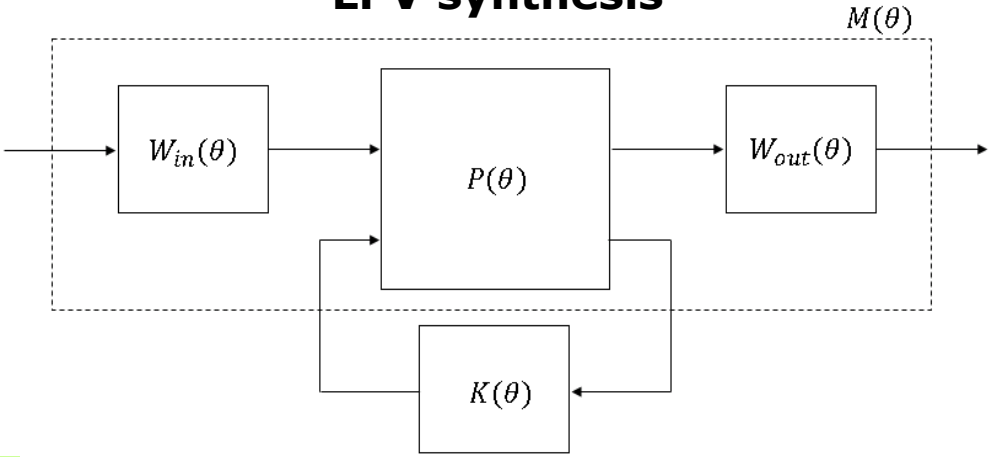

LPV modelling and design using LPVToolsv1.0 from UMN

Same design interconnection as before used for LPV synthesis

LPV design technique:
Nominal nonlinear simulations using VEGACONTROL

Wind VV05: `'07_2015_23_12_005.wind'`

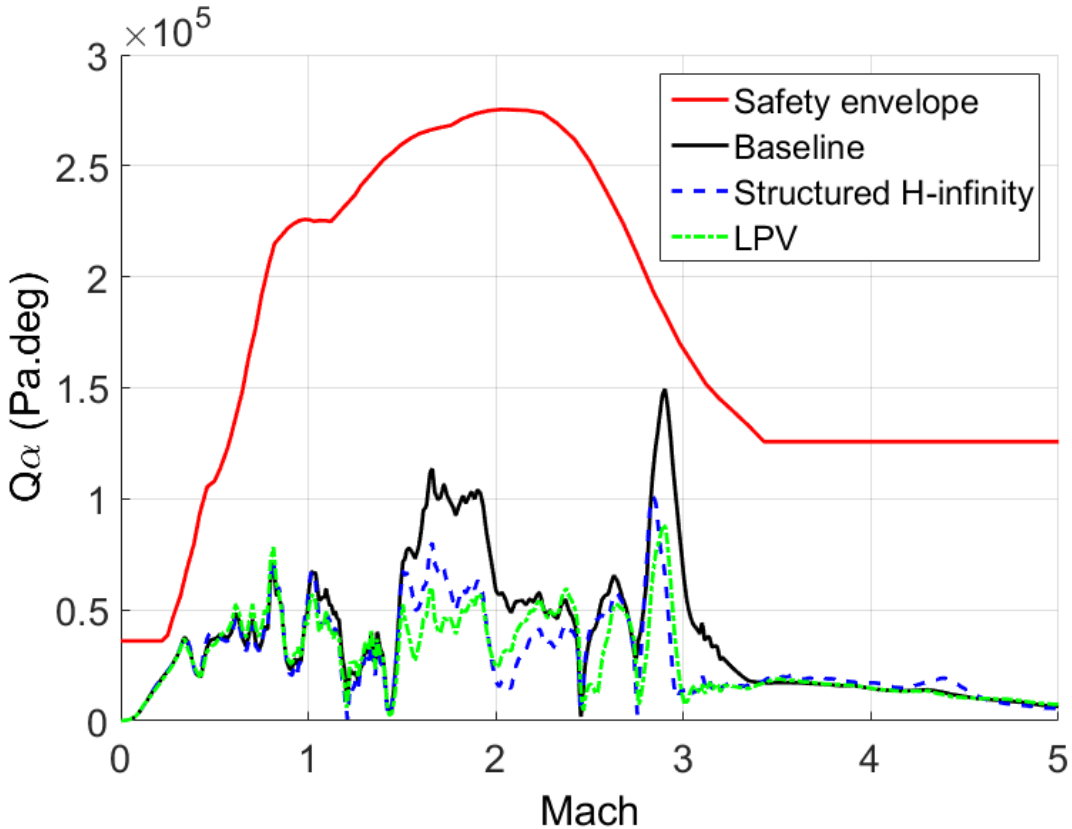

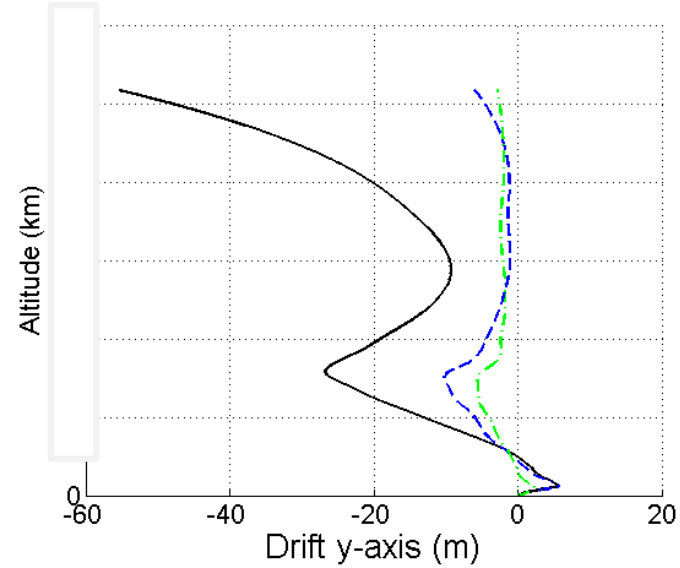

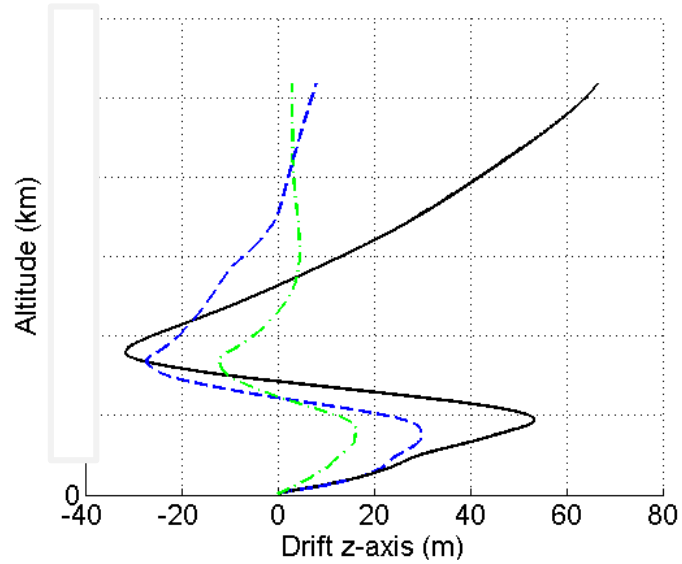

LPV design technique:
Monte-Carlo analysis 1000 runs using VEGACONTROL

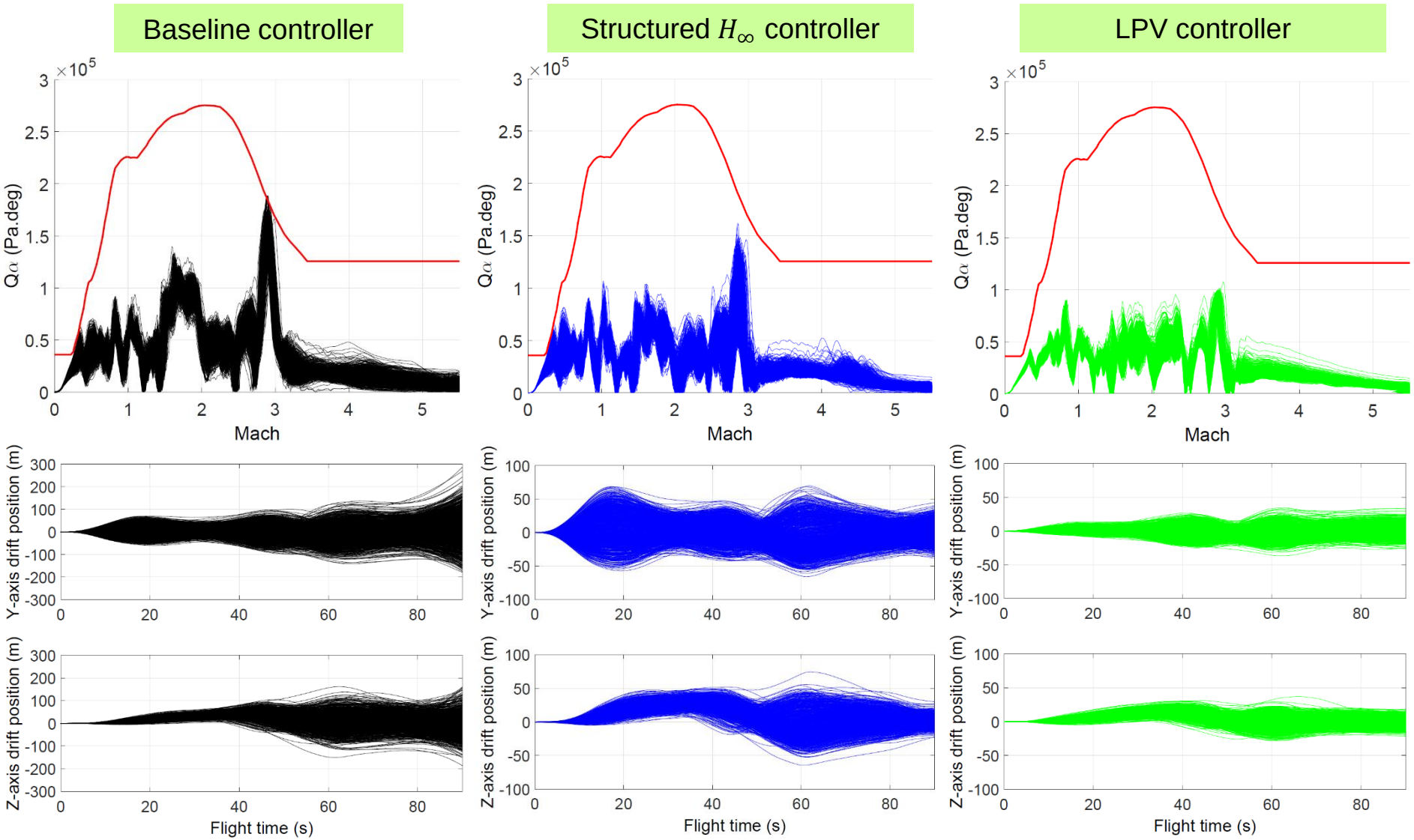

Outline

1. VEGA mission & vehicle
2. Structured H-infinity synthesis
3. LPV (Linear Parameter Varying) synthesis
4. Conclusions

Conclusions

- The atmospheric phase **VEGA launcher control problem** has been presented.

- **Classical control** has a rich heritage but several limitations are recognized.

- **Two robust control design techniques have been presented**:
  - **Structured H_∞** infinity synthesis
  - **LPV** synthesis

A very important achievement is the demonstration of the recovery of legacy controller!!!!

Project aims towards a <u>robust control design and analysis</u> framework:

- More suitable for multivariable control problems
- Incorporating wind disturbance estimation in the design
- Guaranteeing robustness and performance by design
- Allowing to perform RS/RP, WC and TV/NL analyses

Thank you for your attention

Diego Navarro-Tapia
diego.navarro-tapia@bristol.ac.uk