Finite Horizon Robustness Analysis of LTV Systems Using Integral Quadratic Constraints

Peter Seiler
University of Minnesota

M. Moore, C. Meissen, M. Arcak, and A. Packard
University of California, Berkeley

International Workshop in Robust Modeling, Design & Analysis
September 18, 2017

Analysis Objective

Goal: Assess the robustness of linear time-varying (LTV) systems on finite horizons.

Approach: Classical Gain/Phase Margins focus on (infinite horizon) stability and frequency domain concepts.

Instead focus on:

- Finite horizon metrics, e.g. induced gains and reachable sets.
- Effect of disturbances and model uncertainty (D-scales, IQCs, etc).
- Time-domain analysis conditions.

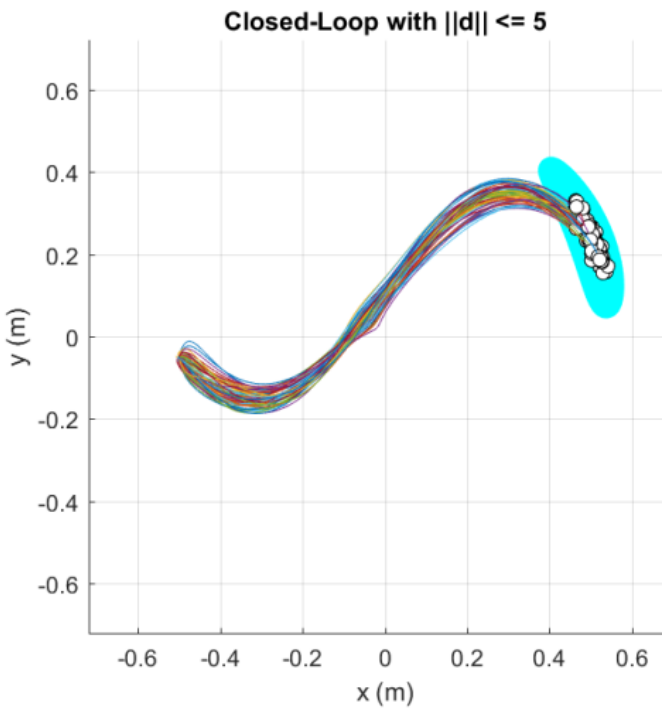

Two-Link Robot Arm

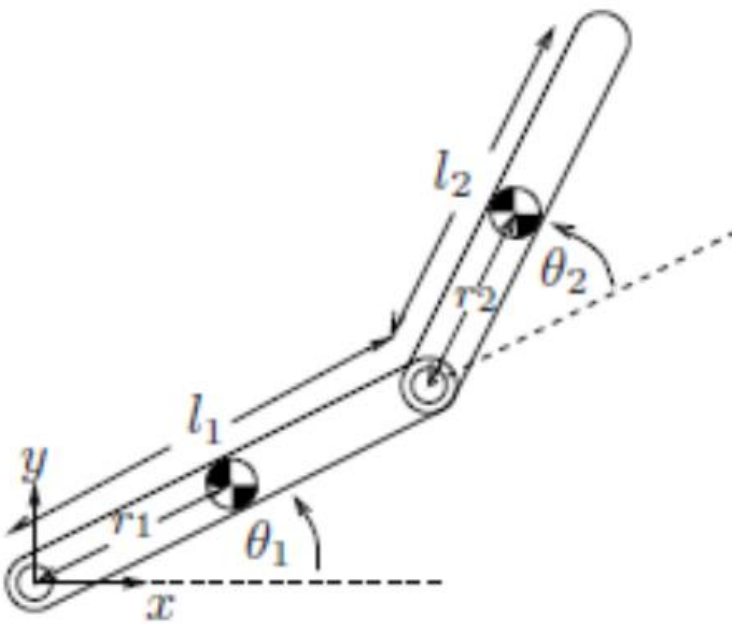

Two-Link Diagram [MZS]

Nonlinear dynamics [MZS]:

$$\dot{\eta} = f(\eta, \tau, d)$$

where

$$\eta = [\theta_1, \dot{\theta}_1, \theta_2, \dot{\theta}_2]^T$$
$$\tau = [\tau_1,\ \tau_2\ ]^T$$
$$d = [d_1,\ d_2\ ]^T$$

τ and d are control torques and disturbances at the link joints.

[MZS] R. Murray, Z. Li, and S. Sastry. *A Mathematical Introduction to Robot Manipulation*, 1994.

Nominal Trajectory (Cartesian Coords.)

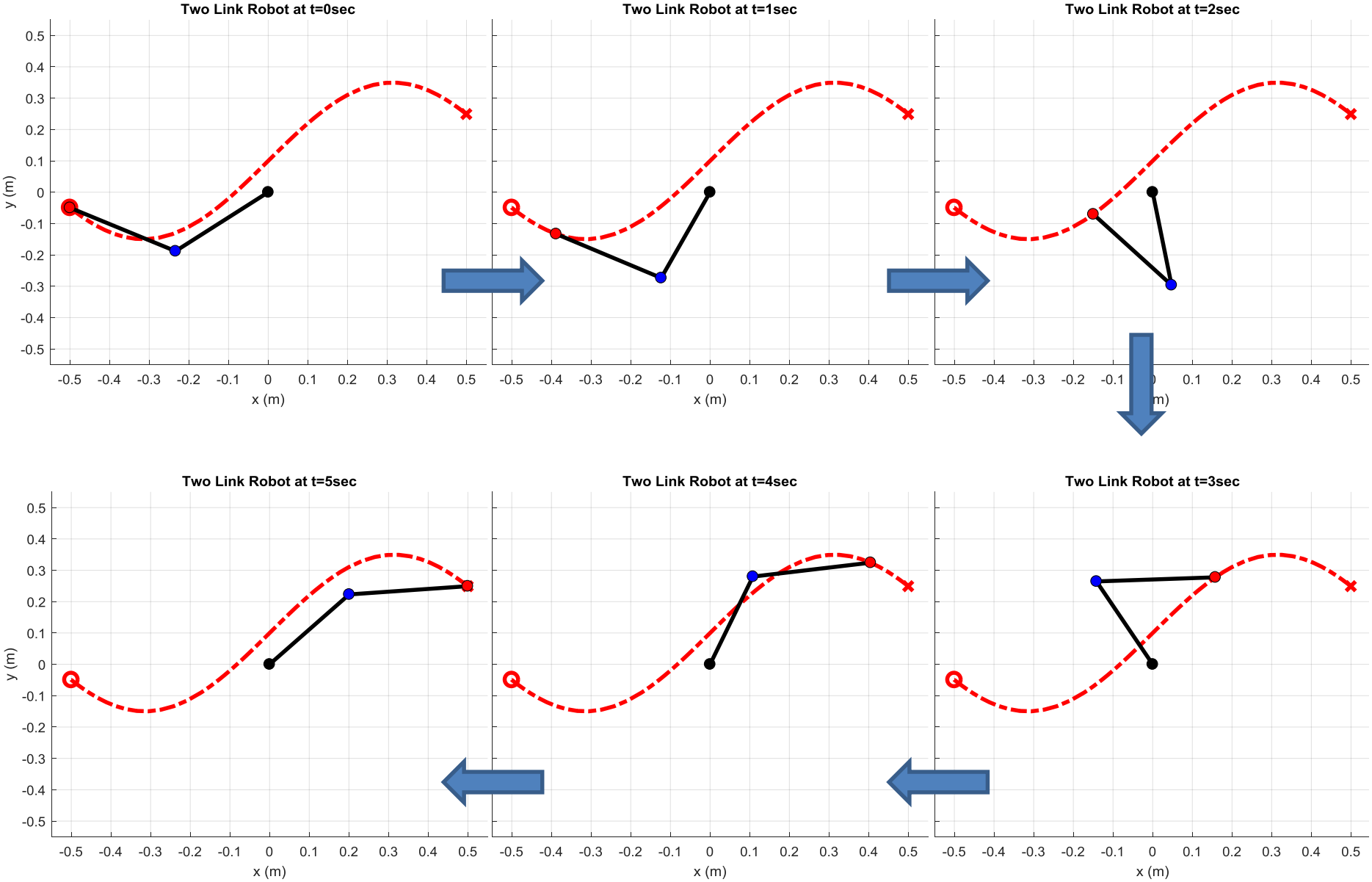

Effect of Disturbances / Uncertainty

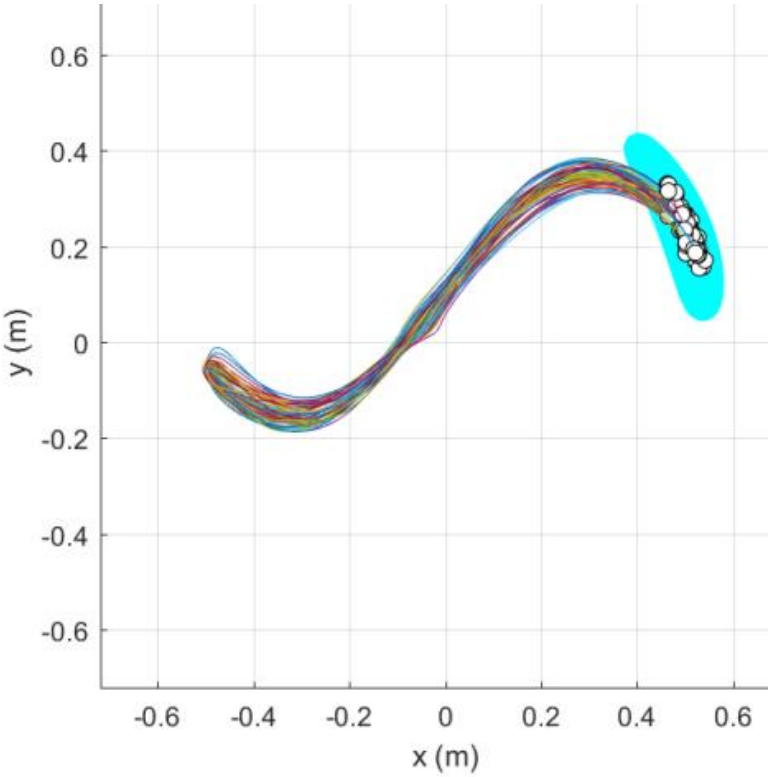

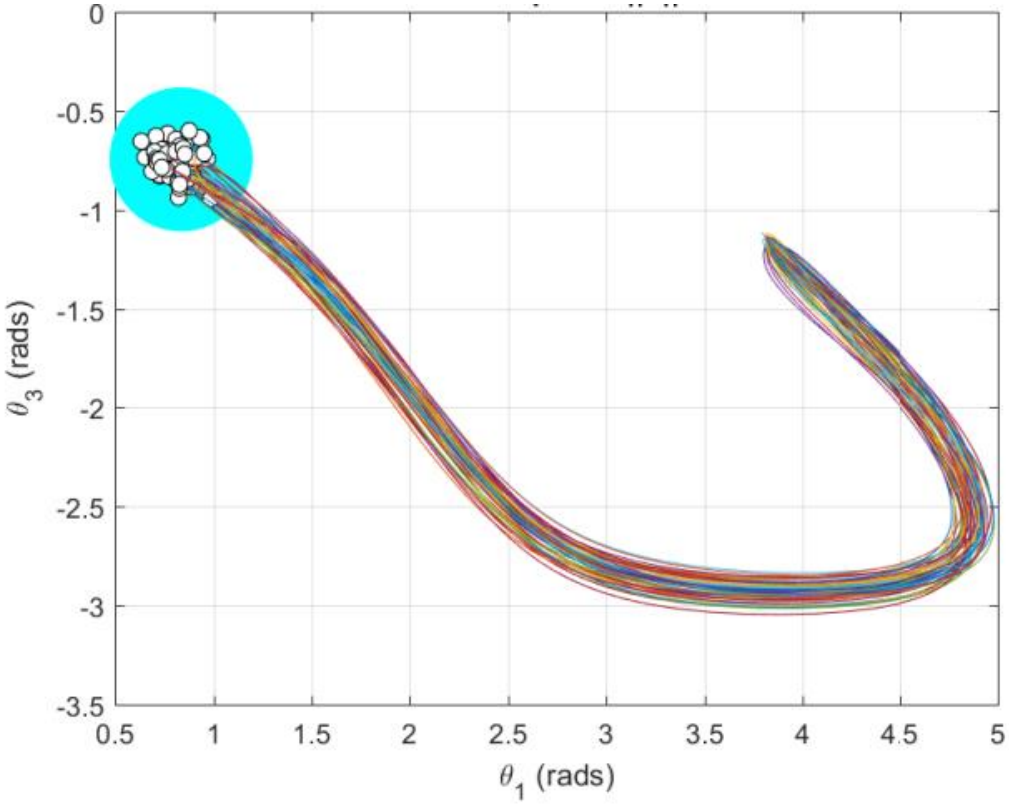

Cartesian Coords.

Joint Angles

Overview of Analysis Approach

Nonlinear dynamics:

$$\dot{\eta} = f(\eta, \tau, d)$$

Linearize along a (finite –horizon) trajectory $(\bar{\eta}, \bar{\tau}, d = 0)$

$$\dot{x} = A(t)x + B(t)u + B(t)d$$

Compute bounds on the terminal state *x(T)* or other quantity *e(T) = C x(T)* accounting for disturbances and uncertainty.

Comments:

- The analysis can be for open or closed-loop.
- LTV analysis complements the use of Monte Carlo simulations.

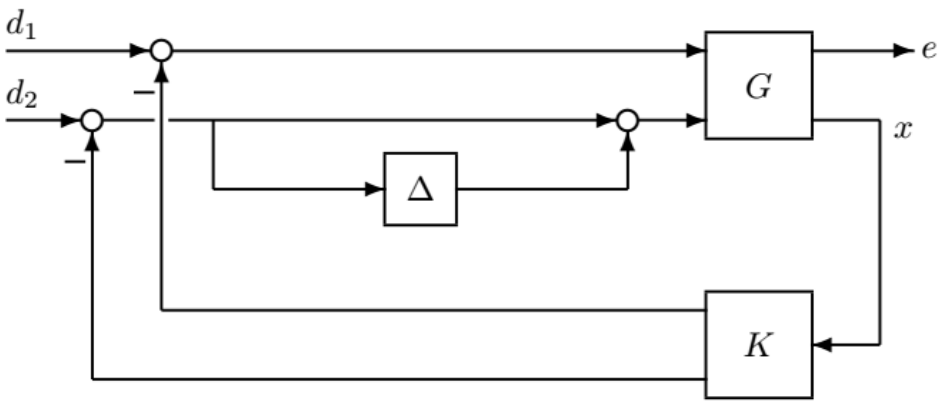

Outline

- Nominal LTV Performance
- Robust LTV Performance
- Examples
- Conclusions

Outline

- **Nominal LTV Performance**
- Robust LTV Performance
- Examples
- Conclusions

Finite-Horizon LTV Performance

Finite-Horizon LTV System *G* defined on [0,T]

$$\dot{x}(t) = A(t)x(t) + B(t)d(t)$$
$$e(t) = C(t)x(t) + D(t)d(t)$$

Induced L_2 Gain

$$\|G\|_{2,[0,T]} := \sup \left\{ \frac{\|e\|_{2,[0,T]}}{\|d\|_{2,[0,T]}} \;\middle|\; x(0) = 0, 0 \neq d \in \mathcal{L}_{2,[0,T]} \right\}$$

L_2-to-Euclidean Gain

$$\|G\|_{E,[0,T]} := \sup \left\{ \frac{\|e(T)\|_2}{\|d\|_{2,[0,T]}} \;\middle|\; x(0) = 0, 0 \neq d \in \mathcal{L}_{2,[0,T]} \right\}$$

The L_2-to-Euclidean gain requires *D(T)=0* to be well-posed.

The definition can be generalized to estimate ellipsoidal bounds on the reachable set of states at *T.*

General (Q,S,R,F) Cost

Cost function *J* defined by *(Q,S,R,F)*

$$J(d) := x(T)^T F x(T) + \int_0^T \begin{bmatrix} x(t) \\ d(t) \end{bmatrix}^T \begin{bmatrix} Q(t) & S(t) \\ S(t)^T & R(t) \end{bmatrix} \begin{bmatrix} x(t) \\ d(t) \end{bmatrix} dt$$

Subject to: LTV Dynamics with *x(0)=0*

Example: Induced L_2 Gain

Select *(Q,S,R,F)* as:

$$Q(t) := C(t)^T C(t),\ S(t) := C(t)^T D(t),\ R(t) := D(t)^T D(t) - \gamma^2 I_{n_d},\ \text{and}\ F := 0.$$

Cost Function *J* is:

$$J(d) = \|e\|^2_{2,[0,T]} - \gamma^2 \|d\|^2_{2,[0,T]}$$

$\Rightarrow$ $J(d) \leq 0$ for all $d \in \mathcal{L}_2[0,T]$ if and only if $\|G\|_{2,[0,T]} \leq \gamma$.

General (Q,S,R,F) Cost

Cost function *J* defined by *(Q,S,R,F)*

$$J(d) := x(T)^T F x(T) + \int_0^T \begin{bmatrix} x(t) \\ d(t) \end{bmatrix}^T \begin{bmatrix} Q(t) & S(t) \\ S(t)^T & R(t) \end{bmatrix} \begin{bmatrix} x(t) \\ d(t) \end{bmatrix} dt$$

Subject to: LTV Dynamics with *x(0)=0*

Example: L_2-to-Euclidean Gain

Select *(Q,S,R,F)* as:

$$Q(t) := 0,\ S(t) := 0,\ R(t) := -\gamma^2 I_{n_d},\ \text{and}\ F := C^T(T)C(T).$$

Cost Function *J* is:

$$J(d) = \|e(T)\|_2^2 - \gamma^2 \|d\|_{2,[0,T]}^2$$

$\Rightarrow$ $J(d) \leq 0$ for all $d \in \mathcal{L}_2[0,T]$ if and only if $\|G\|_{E,[0,T]} \leq \gamma$.

Strict Bounded Real Lemma

Theorem 1. *Assume $R(t) \prec 0$ for all $t \in [0,T]$. The following are equivalent:*

1. $\exists \epsilon > 0$ *such that* $J(d) \leq -\epsilon \|d\|^2_{2,[0,T]}$ $\forall d \in \mathcal{L}_2[0,T]$.
2. *There exists a differentiable function Y on $[0,T]$ such that $Y(T) = F$ and*

$$\dot{Y} + A^T Y + YA + Q - (YB + S)R^{-1}(YB + S)^T = 0$$

   This is a **Riccati Differential Equation (RDE)**.

3. *There exists $\epsilon > 0$ and a differentiable function P on $[0,T]$ such that $P(T) \succeq F$ and*

$$\dot{P} + A^T P + PA + Q - (PB + S)R^{-1}(PB + S)^T \preceq -\epsilon I$$

   This is a strict **Riccati Differential Inequality (RDI)**.

This is a generalization of results contained in:

*Tadmor, Worst-case design in the time domain. *MCSS*, 1990 .

*Ravi, Nagpal, and Khargonekar. H_∞ control of linear time-varying systems. *SIAM JCO*, 1991.

*Green and Limebeer. *Linear Robust Control*, 1995.

*Chen and Tu. The strict bounded real lemma for linear time-varying systems. JMAA, 2000.

Proof: 3→1

By Schur complements, the RDI is equivalent to:

$$\begin{bmatrix} \dot{P} + A^T P + PA & PB \\ B^T P & 0 \end{bmatrix} + \begin{bmatrix} Q & S \\ S^T & R \end{bmatrix} \preceq -\tilde{\epsilon} I$$

This is an LMI in *P*. It is also equivalent to a dissipation inequality with the storage function $V(x,t) := x^T P(t) x$.

$$\dot{V} + \begin{bmatrix} x \\ d \end{bmatrix}^T \begin{bmatrix} Q & S \\ S^T & R \end{bmatrix} \begin{bmatrix} x \\ d \end{bmatrix} \leq -\tilde{\epsilon} \begin{bmatrix} x \\ d \end{bmatrix}^T \begin{bmatrix} x \\ d \end{bmatrix}$$

Integrate from *t=0* to *t=T*:

$$V(x(T),T) - V(x(0),0) + \int_0^T \begin{bmatrix} x(t) \\ d(t) \end{bmatrix}^T \begin{bmatrix} Q(t) & S(t) \\ S(t)^T & R(t) \end{bmatrix} \begin{bmatrix} x(t) \\ d(t) \end{bmatrix} dt \leq -\tilde{\epsilon} \left\| \left[\begin{smallmatrix} x \\ d \end{smallmatrix} \right] \right\|_{2,[0,T]}^2$$

Apply *x(0)=0* and *P(T)≥F:*

$$J(d) \leq -\epsilon \|d\|_{2,[0,T]}^2$$

Strict Bounded Real Lemma

Theorem 1. *Assume $R(t) \prec 0$ for all $t \in [0,T]$. The following are equivalent:*

1. $\exists \epsilon > 0$ *such that* $J(d) \leq -\epsilon \|d\|^2_{2,[0,T]}$ $\forall d \in \mathcal{L}_2[0,T]$.
2. *There exists a differentiable function Y on $[0,T]$ such that $Y(T) = F$ and*

$$\dot{Y} + A^T Y + YA + Q - (YB + S)R^{-1}(YB + S)^T = 0$$

   This is a **Riccati Differential Equation (RDE)**.

3. *There exists $\epsilon > 0$ and a differentiable function P on $[0,T]$ such that $P(T) \succeq F$ and*

$$\dot{P} + A^T P + PA + Q - (PB + S)R^{-1}(PB + S)^T \preceq -\epsilon I$$

   This is a strict **Riccati Differential Inequality (RDI)**.

Comments:

*For nominal analysis, the RDE can be integrated. If the solution exists on [0,T] then nominal performance is achieved. This typically involves bisection, e.g. over γ, to find the best bound on a gain.

*For robustness analysis, both the RDI and RDE will be used to construct an efficient numerical algorithm.

Outline

- Nominal LTV Performance
- **Robust LTV Performance**
- Examples
- Conclusions

Uncertainty Model

- Standard LFT Model, $F_u(G,\Delta)$, where G is LTV:

$$\begin{aligned}
\dot{x}_G(t) &= A_G(t)\, x_G(t) + B_{G1}(t)\, w(t) + B_{G2}(t)\; d(t) \\
v(t) &= C_{G1}(t)\, x_G(t) + D_{G11}(t)\, w(t) + D_{G12}(t)\; d(t) \\
e(t) &= C_{G2}(t)\, x_G(t) + D_{G21}(t)\, w(t) + D_{G22}(t)\; d(t)
\end{aligned}$$

Δ is block structured and used to model parametric / dynamic uncertainty and nonlinear perturbations.

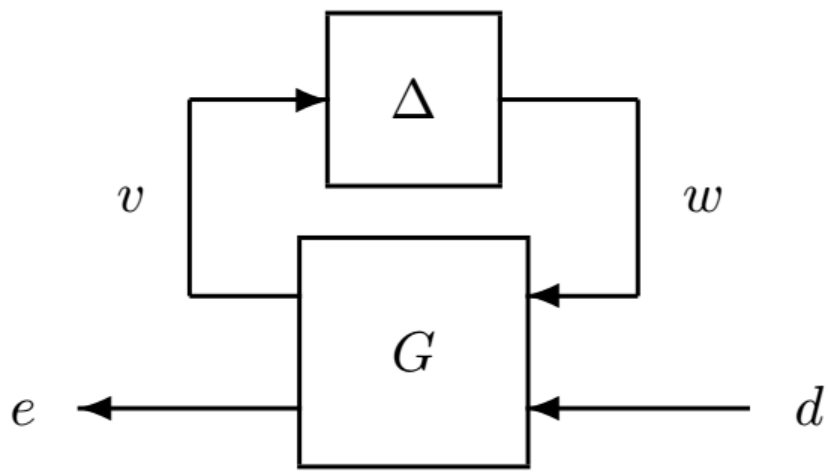

Integral Quadratic Constraints (IQCs)

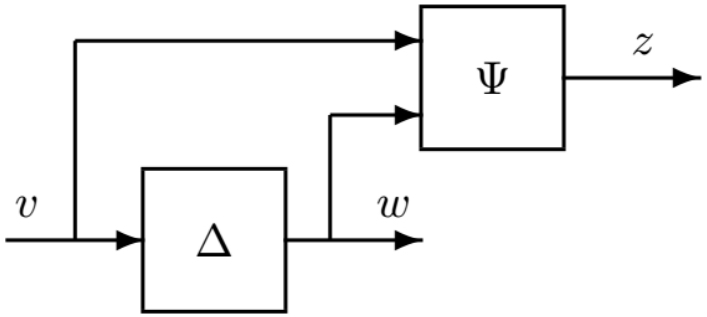

$$\int_0^T z(t)^T M(t) z(t)\, dt \geq 0$$

Definition 2. *Let $\Psi \in \mathbb{RH}_\infty^{n_z \times (n_v + n_w)}$ and $M : [0,T] \to \mathbb{S}^{n_z}$ with M piecewise continuous. A bounded, causal operator $\Delta : \mathbf{L}_2^{n_v}[0,T] \to \mathbf{L}_2^{n_w}[0,T]$ satisfies the time domain IQC defined by (Ψ, M) if the following inequality holds for all $v \in \mathcal{L}_2^{n_v}[0,T]$ and $w = \Delta(v)$:*

$$\int_0^T z(t)^T M(t) z(t)\, dt \geq 0 \tag{1}$$

where z is the output of Ψ driven by inputs (v, w) with zero initial conditions $x_\psi(0) = 0$.

Integral Quadratic Constraints (IQCs)

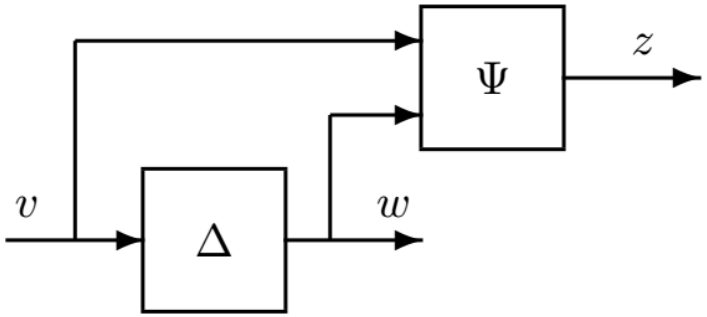

$$\int_0^T z(t)^T M(t) z(t)\, dt \geq 0$$

Comments:

*A library of IQC for various uncertainties / nonlinearities is given in [MR]. Many of these are given as frequency domain inequalities.

*Time-domain IQCs that hold over finite horizons are called hard.

*This generalizes D and D/G scales for LTI and parametric uncertainty. It can be used to model the I/O behavior of nonlinear elements.

[MR] Megretski and Rantzer. System analysis via integral quadratic constraints, TAC, 1997.

Robustness Analysis

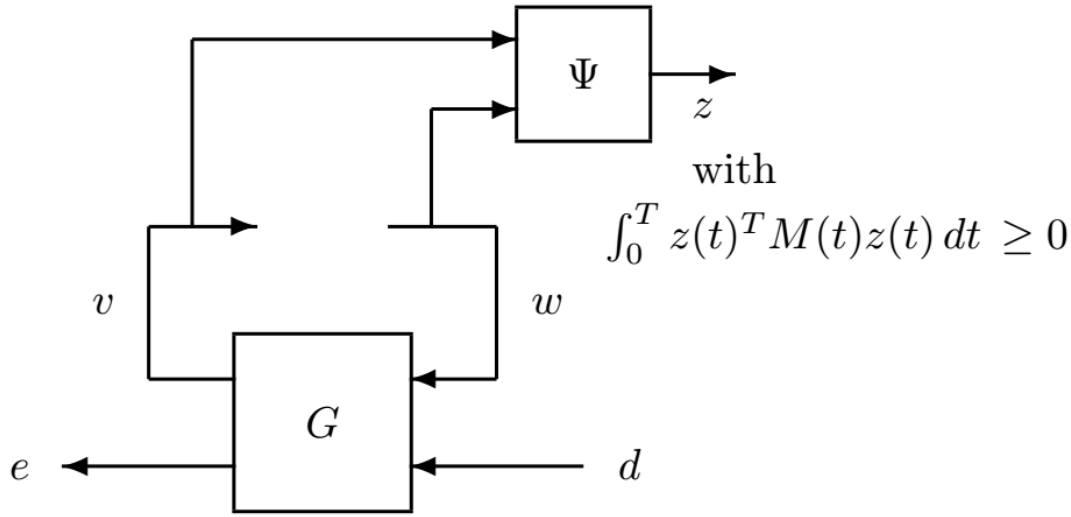

The robustness analysis is performed on the extended (LTV) system of *(G, Ψ)* using the constraint on *z*.

$$\begin{bmatrix} \dot{x}(t) \\ z(t) \\ e(t) \end{bmatrix} = \begin{bmatrix} \mathcal{A}(t) & \mathcal{B}_1(t) & \mathcal{B}_2(t) \\ \mathcal{C}_1(t) & \mathcal{D}_{11}(t) & \mathcal{D}_{12}(t) \\ \mathcal{C}_2(t) & \mathcal{D}_{21}(t) & \mathcal{D}_{22}(t) \end{bmatrix} \begin{bmatrix} x(t) \\ w(t) \\ d(t) \end{bmatrix}$$

Robustness Analysis: Induced L_2 Gain

Theorem 3. *Assume Δ satisfies the IQC defined by (Ψ, M). If there exists $\epsilon > 0$, $\gamma > 0$ a differentiable function P on $[0,T]$ and such that $P(T) \succeq 0$ and for all $t \in [0,T]$*

$$\begin{bmatrix} \dot{P} + \mathcal{A}^T P + P\mathcal{A} & P\mathcal{B}_1 & P\mathcal{B}_2 \\ \mathcal{B}_1^T P & 0 & 0 \\ \mathcal{B}_2^T P & 0 & -\gamma^2 I \end{bmatrix} + (\cdot)^T \begin{bmatrix} \mathcal{C}_2 & \mathcal{D}_{21} & \mathcal{D}_{22} \end{bmatrix} + (\cdot)^T M \begin{bmatrix} \mathcal{C}_1 & \mathcal{D}_{11} & \mathcal{D}_{12} \end{bmatrix} \preceq -\epsilon I$$

then $\|F_u(G,\Delta)\|_{2,[0,T]} < \gamma$.

Robustness Analysis: Induced L_2 Gain

Theorem 3. *Assume Δ satisfies the IQC defined by (Ψ, M). If there exists $\epsilon > 0$, $\gamma > 0$ a differentiable function P on $[0,T]$ and such that $P(T) \succeq 0$ and for all $t \in [0,T]$*

$$\begin{bmatrix} \dot{P} + \mathcal{A}^T P + P\mathcal{A} & P\mathcal{B}_1 & P\mathcal{B}_2 \\ \mathcal{B}_1^T P & 0 & 0 \\ \mathcal{B}_2^T P & 0 & -\gamma^2 I \end{bmatrix} + (\cdot)^T \begin{bmatrix} \mathcal{C}_2 & \mathcal{D}_{21} & \mathcal{D}_{22} \end{bmatrix} + (\cdot)^T M \begin{bmatrix} \mathcal{C}_1 & \mathcal{D}_{11} & \mathcal{D}_{12} \end{bmatrix} \preceq -\epsilon I$$

then $\|F_u(G,\Delta)\|_{2,[0,T]} < \gamma$.

Proof:

The Differential LMI (DLMI) is equivalent to a dissipation ineq. with storage function $V(x,t) := x^T P(t) x$.

$$\dot{V}(x,t) + z(t)^T M z(t) - (\gamma^2 - \epsilon) d(t)^T d(t) + e(t)^T e(t) \leq 0$$

Integrate and apply the IQC + boundary conditions to conclude that the induced L_2 gain is $\leq\gamma$.

Robustness Analysis: Induced L_2 Gain

Theorem 3. *Assume Δ satisfies the IQC defined by (Ψ, M). If there exists $\epsilon > 0$, $\gamma > 0$ a differentiable function P on $[0,T]$ and such that $P(T) \succeq 0$ and for all $t \in [0,T]$*

$$\begin{bmatrix} \dot{P} + \mathcal{A}^T P + P\mathcal{A} & P\mathcal{B}_1 & P\mathcal{B}_2 \\ \mathcal{B}_1^T P & 0 & 0 \\ \mathcal{B}_2^T P & 0 & -\gamma^2 I \end{bmatrix} + (\cdot)^T \begin{bmatrix} \mathcal{C}_2 & \mathcal{D}_{21} & \mathcal{D}_{22} \end{bmatrix} + (\cdot)^T M \begin{bmatrix} \mathcal{C}_1 & \mathcal{D}_{11} & \mathcal{D}_{12} \end{bmatrix} \preceq -\epsilon I$$

then $\|F_u(G,\Delta)\|_{2,[0,T]} < \gamma$.

Comments:

*A similar result exists for L_2-to-Euclidean or, more generally (Q,S,R,F) cost functions.

*The DLMI can be expressed as a Riccati Differential Ineq. (RDI) by Schur Complements.

*The RDI is equivalent to a related Riccati Differential Eq. (RDE) condition by the strict Bounded Real Lemma.

Robustness Analysis: Induced L_2 Gain

Theorem 3. *Assume Δ satisfies the IQC defined by (Ψ, M). If there exists $\epsilon > 0$, $\gamma > 0$ a differentiable function P on $[0,T]$ and such that $P(T) \succeq 0$ and for all $t \in [0,T]$*

$$\begin{bmatrix} \dot{P} + \mathcal{A}^T P + P\mathcal{A} & P\mathcal{B}_1 & P\mathcal{B}_2 \\ \mathcal{B}_1^T P & 0 & 0 \\ \mathcal{B}_2^T P & 0 & -\gamma^2 I \end{bmatrix} + (\cdot)^T \begin{bmatrix} \mathcal{C}_2 & \mathcal{D}_{21} & \mathcal{D}_{22} \end{bmatrix} + (\cdot)^T M \begin{bmatrix} \mathcal{C}_1 & \mathcal{D}_{11} & \mathcal{D}_{12} \end{bmatrix} \preceq -\epsilon I$$

then $\|F_u(G,\Delta)\|_{2,[0,T]} < \gamma$.

Comments:

*The DLMI is convex in the IQC matrix *M* but requires gridding on time *t* and parameterization of *P*.

*The RDE form directly solves for *P* by integration (no time gridding) but the IQC matrix *M* enters in a non-convex fashion.

Numerical Implementation

An efficient numerical algorithm is obtained by mixing the LMI and RDE conditions.

Sketch of algorithm:

1. Initialize: Select a time grid and basis functions for *P(t).*
2. Solve DLMI: Obtain finite-dimensional optim. by enforcing DLMI on the time grid and using basis functions.
3. Solve RDE: Use IQC matrix *M* from step 2 and solve RDE. This gives the optimal storage *P* for this matrix *M*.
4. Terminate: Stop if the costs from Steps 2 and 3 are similar. Otherwise return to Step 2 using optimal storage P as a basis function.

Outline

- Nominal LTV Performance
- Robust LTV Performance
- **Examples**
- Conclusions

Example 1: LTI Plant

- Compute the induced L_2 gain of *Fu(G,Δ)* where *Δ* is LTI with $\|\Delta\| \leq 1$ and *G* is:

$$A_G := \begin{bmatrix} -0.8 & -1.3 & -2.1 & -2.5 \\ 2 & -0.9 & -8.4 & 0.7 \\ 2 & 8.6 & -0.5 & 12.5 \\ 2.1 & -0.3 & -12.6 & -0.6 \end{bmatrix} \quad B_G := \begin{bmatrix} -0.6 & 1 \\ 0 & 0.2 \\ 0 & 0.4 \\ -1.3 & -0.2 \end{bmatrix}$$

$$C_G := \begin{bmatrix} -1.4 & 0 & 0.5 & 0 \\ 0 & -0.1 & 1 & 0 \end{bmatrix} \quad D_G := \begin{bmatrix} -0.3 & 0 \\ 0 & 0 \end{bmatrix}$$

- By (standard) mu analysis, the worst-case (infinite horizon) L_2 gain is 1.49.
- This example is used to assess the finite-horizon robustness results.

Example 1: Finite Horizon Results

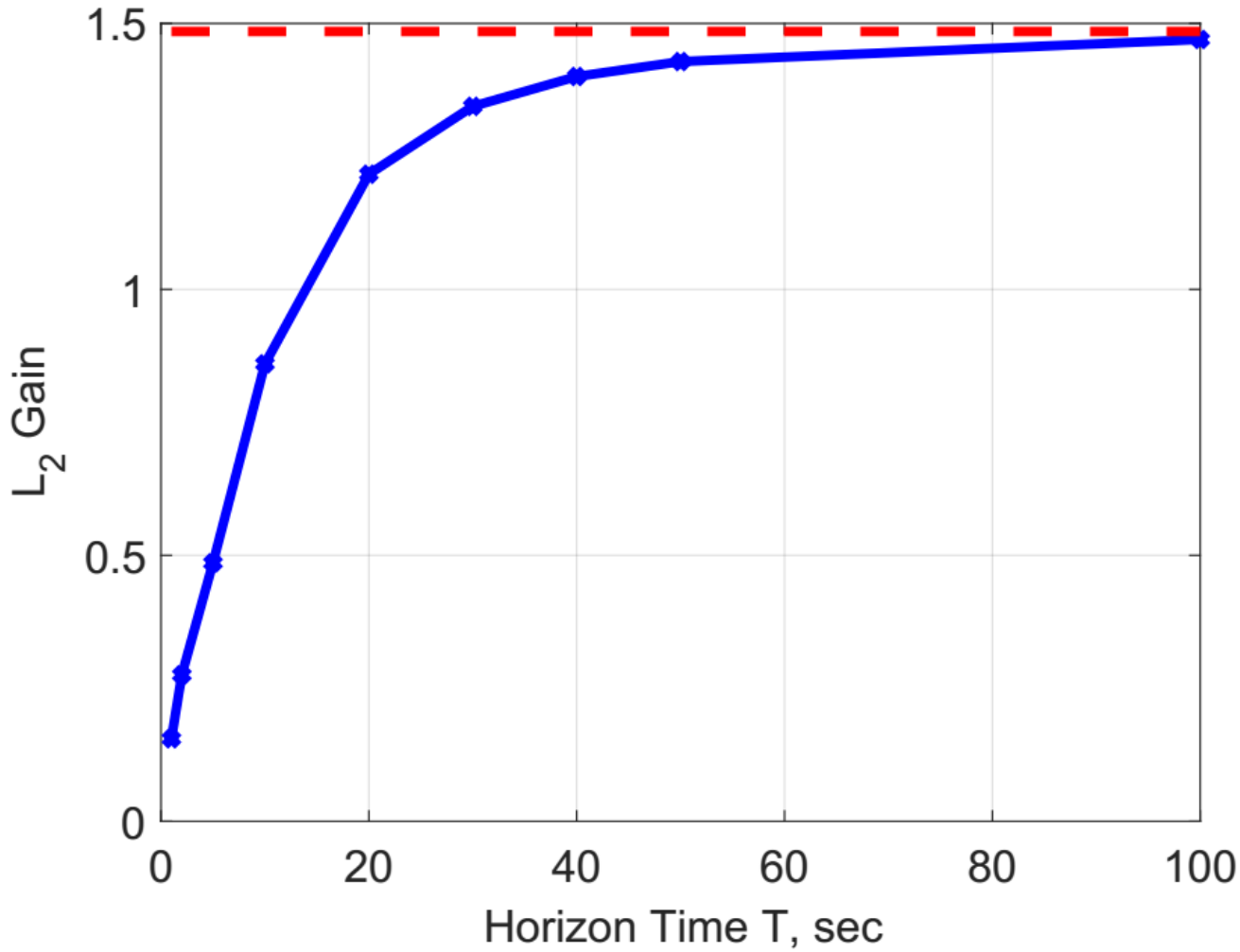

Total comp. time is 466 sec to compute worst-case gains on nine finite horizons.

Example 2: Two-Link Robot Arm

- Assess the worst-case L2-to-Euclidean gain from disturbances at the arm joints to the joint angles.
- LTI uncertainty with $\|\Delta\| \leq 0.8$ injected at 2nd joint.
- Analysis performed along nominal trajectory in with LQR state feedback.

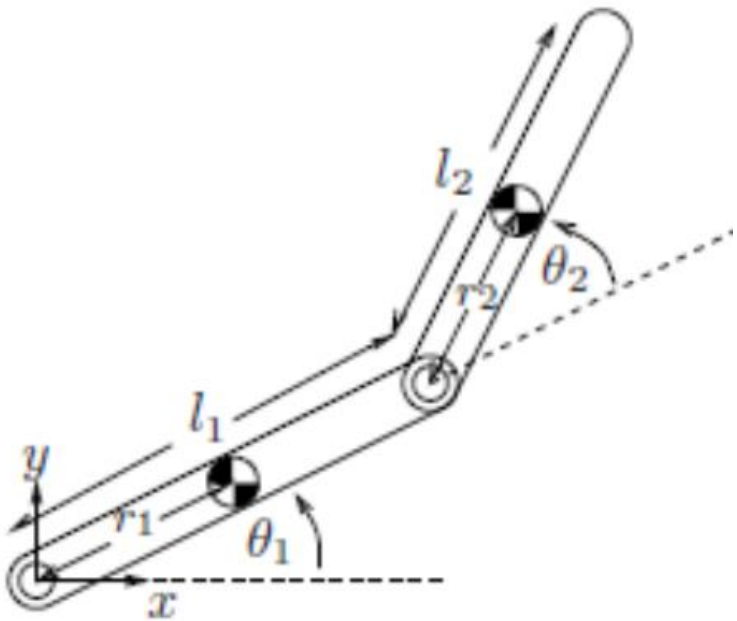

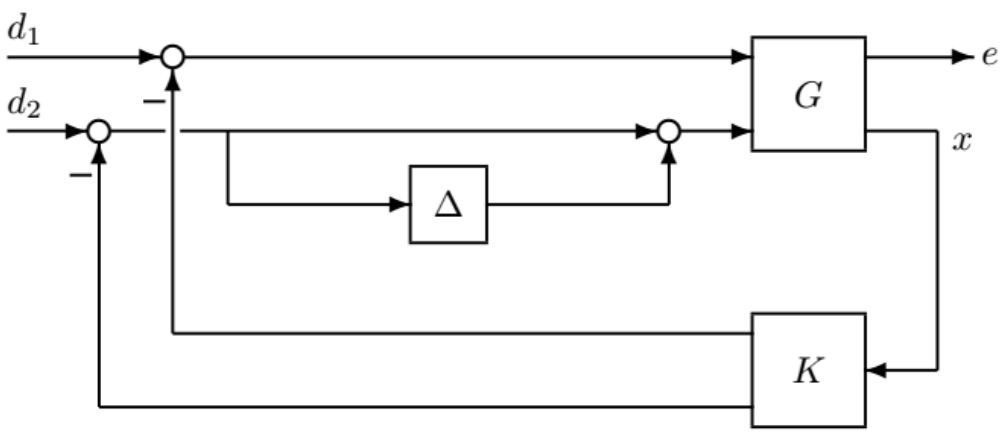

Example 2: Results

Bound on worst-case L_2-to-Euclidean gain = 0.0592.

Computation took 102 seconds.

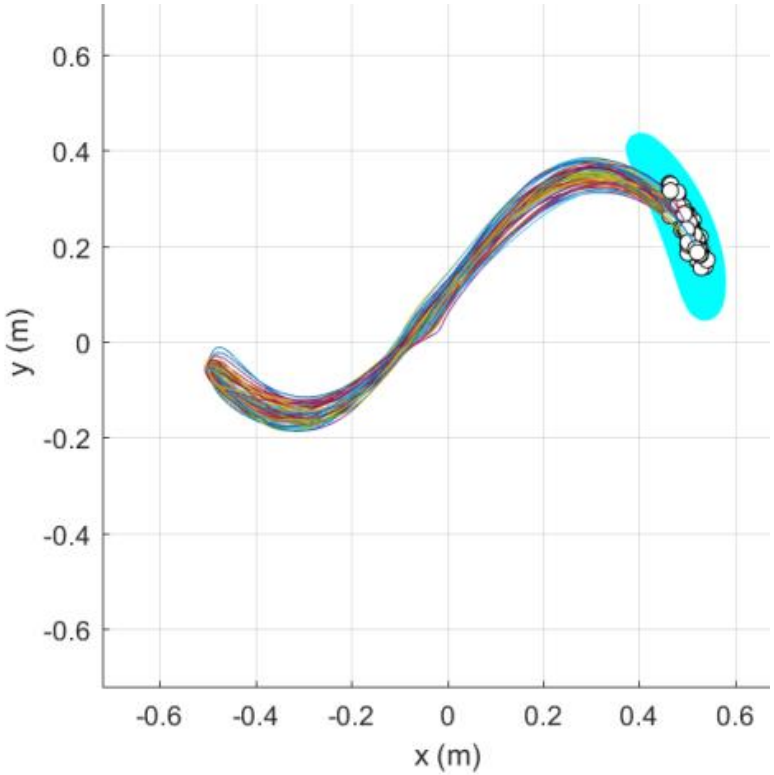

Cartesian Coords.

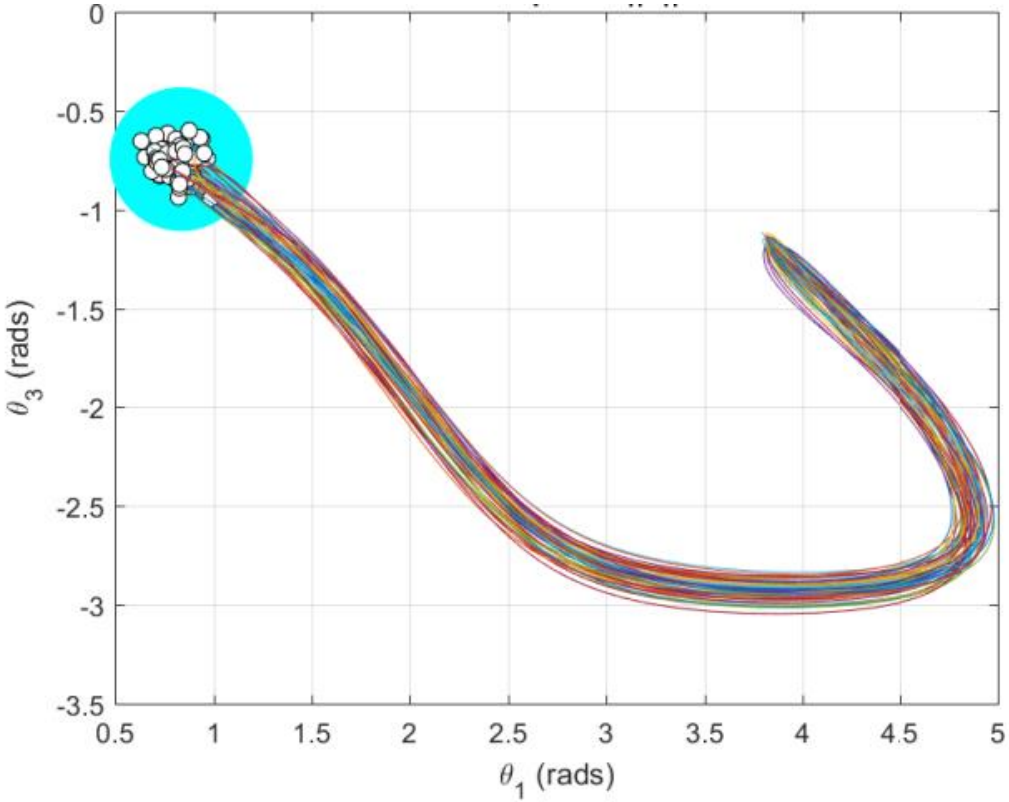

Joint Angles

Outline

- Nominal LTV Performance
- Robust LTV Performance
- Examples
- **Conclusions**

Conclusions

- Main Result: Bounds on finite-horizon robust performance can be computed using differential equations or inequalities.
  - These results complement the use of nonlinear Monte Carlo simulations.
  - It would be useful to construct worst-case inputs / uncertainties analogous to μ lower bounds.
  - An LTVTools toolbox is in development with β-code of the proposed methods.
- References
  - Moore, Finite Horizon Robustness Analysis Using Integral Quadratic Constraints, MS Thesis, 2015.
  - Moore, Seiler, Meissen, Arcak, Packard, Finite Horizon Robustness Analysis of LTV Systems Using Integral Quadratic Constraints, draft in preparation.